f.u.n.k.e.
AVIONICS GMBH

FSG8

VHF/AM Hand-Held-Transceiver for Aircraft-Radio-Communication

P/N F10800-(xxx)-(xxx)

Operating Instructions

(Document-No. 01.150.010.71e)

List of Changes

Revision	Date	Change description
1.00	21.02.2019	First Release
1.10	22.07.2019	CTC-Test Certificate, BAF Certificate added; Chapter 3.6 Warning Tones added; Chapter 11 technical data corrected; Chapter 11 list of accessories corrected;
1.11	21.07.2020	Chapter 11 list of accessories updated;
1.20	08.03.2021	EC-Directive 2014/53/EU and EC-Declaration according to (EU) 2018/1139 inserted; Chapter 11 list of accessories updated;
1.30	28.05.2021	Update for Sw 1.07
1.40	22.09.2022	Notes on charging devices revised
1.50	15.12.2022	UP EC Declaration to Rev1.4

List of Service Bulletins (SB)

Service bulletins are to be inserted in the manual and to be recorded in the table.				
SB Number	Rev. No.	Date of Issue	Date of Insertion	Name

Table of Contents

1 INTRODUCTION

This manual contains information about the physical, mechanical and electric characteristics and instructions on operation of the handheld Transceiver FSG8.

- Before operating the transceiver, please read this instructions thoroughly!
- Keep for future use!
- Please observe the Safety Information!

1.1 Symbols

	Advice, non-observance of which could cause radiation damage to the human body or ignition of combustible materials.

	Vital information that if not followed may cause damage in the device or in other parts of equipment or may have a negative impact on the correct function of the device.

	Information

1.2 Customer Service

For fast handling of returns please follow the instructions on the form for complaints and returns provided in the service area of the f.u.n.k.e. AVIONICS GmbH website www.funkeavionics.de.

	Suggestions for the improvement of our manuals are welcome. Contact: service@funkeavionics.de.

2 GENERAL INFORMATION

This Operating Instruction refers to a handheld Transceiver FSG8, Article-No. F10800. The FSG8 is a radio that is working within the airband frequency range of 118.000 MHz to 136.975 MHz in 25 kHz or 8.33 kHz increments (760 / 2268 channels). The operation mode is Simplex, which is transmitting or receiving only in turns.

	Before using the radio the first time charge the battery for at least 10 hours with 250 mA! The FSG8 has its own internal charging electronics and must therefore **not** be charged by "intelligent" chargers. Only use chargers that are approved for the FSG8.

	The device may only be operated by trained specialist personnel.

3 DEVICE INFORMATION

3.1 Operating Elements Overview

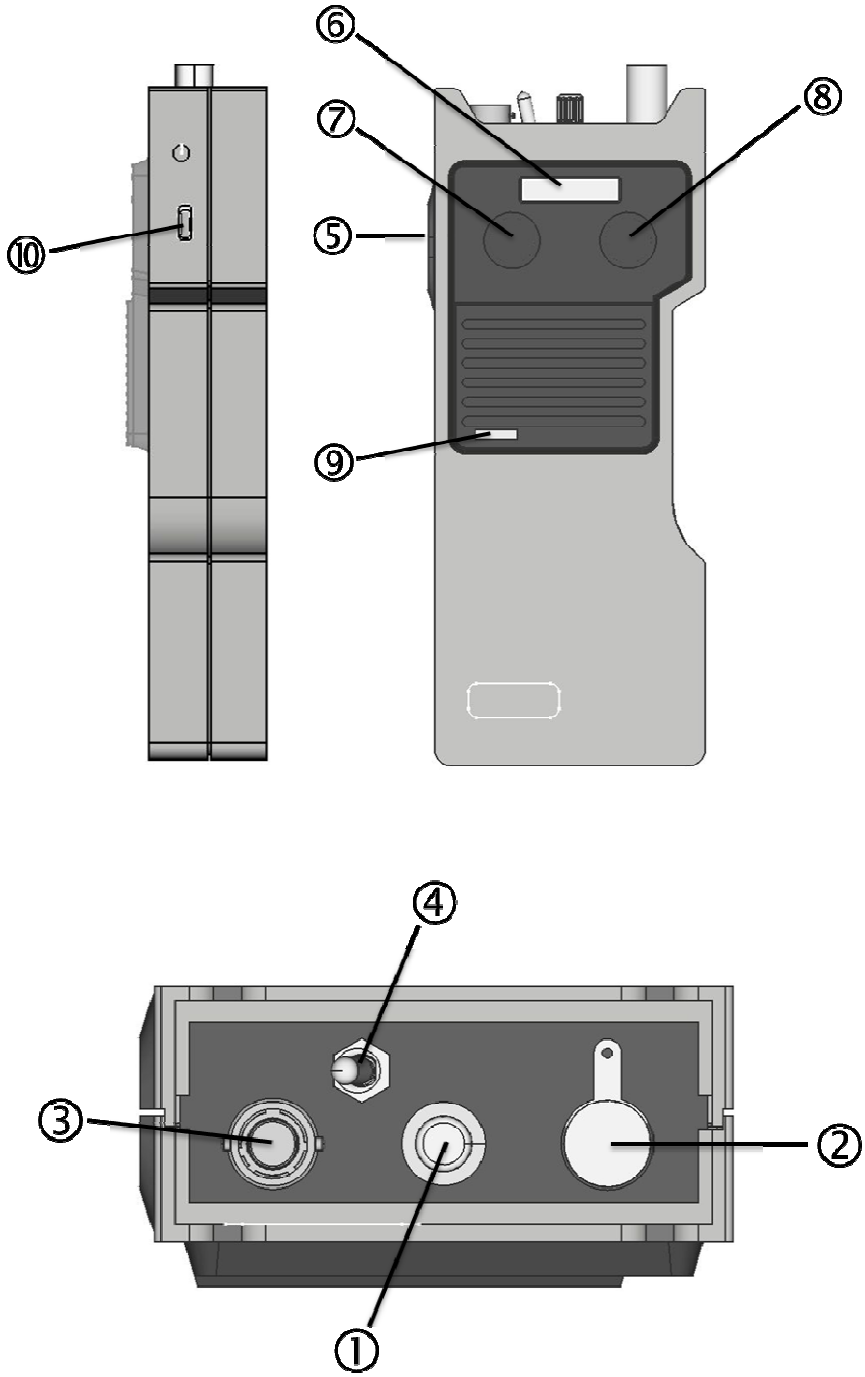

1	OFF/ VOL	Power on/off switch and volume control
2	ANT	TNC Antenna connector
3	CON	Connector for external headset / PTT
4	SQ	Squelch switch
5	PTT	PTT button (Push-to-Talk)
6	LCD	LCD status display
7	T1	Button 1
8	T2	Button 2
9	LED	LED status indication
10	USB	Micro USB Port (for maintenance / service only)

3.2 First use: Switching on / off

1. Connect antenna to the antenna socket ②.
2. Rotate the VOL control ① clockwise to turn the radio ON.
3. After switching on, the LCD display shows "FSG8 f.u.n.k.e. AVIONICS" as ticker and a progress bar from left and right shows the initialization progress.
4. After initialization, the set channel and the battery charge status will be displayed. The radio is always in the LOCKED state after being switched on.
5. Turning the VOL knob further right increases the volume.
6. Turning back to the left stop switches off the device.
7. The radio starts at the same frequencies and settings as before the last power off.

3.3 Receiver Operation

1. Standard Receive Operation
   Switch the Squelch-circuit ON (SQ-toggle switch ④ towards right position "**SQ**"). Receiver noise, weak signals and interference pulses are blocked. Adjust the volume control ① to a desired level.
2. To obtain full receiving radio range switch OFF the squelch ④. Now the radio is noisy during standby operation but no weak signals are suppressed.
3. In noisy environment hold speaker close to your ear or use the noise cancelling headset Art.No. W00049 for this purpose.

3.4 Transmit Operation

1. When using the helical antenna hold transceiver vertically, preferably with the left hand.
2. Care for an all-round obstacle free location; the called station should be within line-of-sight distance.
3. Do not hold the radio such as the antenna gets very close to, or touching, exposed parts of the body, especially the face, shoulder or the eyes. The minimum distance should be at least 15 cm.
4. **Please keep radio discipline. The channel must be clear before transmitting.**
5. Rotate the volume control ① clockwise to turn ON the radio.
6. With the control buttons ⑦ and ⑧ set the desired operating frequency (see below).
7. Press and hold the push-to-talk button ⑤. Speak loud, slow and clear! During transmission, the LED status indicator light is red.
8. When the built-in microphone is used, speak into the microphone from a distance of 3 to 5 cm. After your message release the PTT button ⑤ to clear the channel and hear the reply.

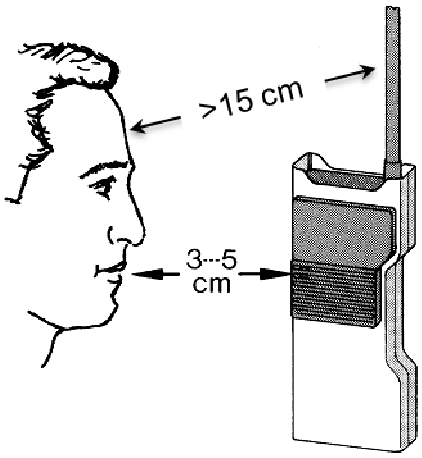

3.5 Charging the Battery

1. The charger DL-5A Part No. F10198 or the plug-in charger Part No. F10059 are suitable for the FSG8.

	The old charger DL-5 from Dittel is not suitable for charging the FSG8 and can lead to overheating of the charger.

2. Plug the DL-5A charger to the accessory jack ③. Connect charger to the power grid.
3. Observe charging temperature of 0 °C … +40 °C / 32 °F … 104 °F.
4. Normal charging time lasts approximately 10 hours at 250 mA.
5. Transceiver not in use should be left connected to the charging device. This keeps the battery fully charged and allows maximum operating time.
6. The FSG8 can be permanently charged via the connection socket ③ both during operation and when switched off.
7. Always recap accessory jack ③ after charging.

At the right side of the display, the battery charge status is shown with a battery symbol.

3 bars visible	Charge level 70 - 100%
2 bars visible	Charge level 40 - 70%
1 bar visible	Charge level 10 - 40%
No bar visible	Charge state <10%
Flashing icon	Charge state critical, device will turn off in the next five minutes
Lightning icon	Device is charging

3.6 Warning tones

Warning sound at very low and critical battery level:

As soon as a very low battery level (only battery frame, without bars) is displayed, two short, consecutive warning tones are emitted via the loudspeaker after two minutes. When using a headset, these are played through the headphones. The tones will repeat every two minutes and the volume will be according to the volume setting of the VOL knob. The warning tones are also emitted at critical battery status (flashing frame, without bars).

Warning sound when switching off the device:

As soon as a critical battery level (flashing frame, without bars) is displayed, the device will switch off after 5 minutes. Shortly before switching off, three consecutive warning tones are emitted and the red LED lights up. When using a headset, the sounds are played through the headphones, otherwise through the speaker. The volume is independent of the VOL knob position and is set to the loudest level.

4 FREQUENCY CONTROL

4.1 General Information

The FSG8 is controlled by means of the two push-buttons on the left and right side beneath the frequency display.

The display shows the following elements:

On the left side of the display, the operating modes are displayed as follows:

LOCKED: the buttons of the radio are locked

CHANNEL mode: display of selected memory position

FREQUENCY mode: enables entry of free selectable frequencies / channels.

MEMORY mode: allows to save channels

In the middle of the display, the current channel used is displayed in light letters on a dark background:

The battery charge indicator is located on the right side of the display.

4.2 Operating Modes

There are 6 different operational modes of the FSG8:

1. OFF - when the volume knob ① is turned all the way left.
2. LOCKED - The radio is always in the locked state after being switched on. To leave the LOCKED mode, both buttons ⑦ and ⑧ must be pressed together for at least 3 seconds.
3. In CHANNEL mode from up to 10 stored channels (F and 1-9) can be selected.
4. Free entry of a frequency (operating mode FREQUENCY) can only be done in channel F. In this operating mode, a number in the frequency display is displayed inverted
5. In MEMORY mode the actual channel can be stored to one of the 10 channel memories.
6. The MENU mode allows to change parameters such as channel spacing and squelch level.

4.3 Overview of Key Functions

The table below lists the key functions in each mode:

Mode	LEFT	UNLOCK o---= LOCK (2s)	RIGHT	Push Time
CHANNEL	UP CH MENU		--- FREQUENCY	Short Long
FREQUENCY	UP NUM CANCEL		SEL MEMORY	Short Long
MEMORY	UP CH CANCEL		--- SAVE	Short Long
MENU	DOWN ---		SEL ---	Short Long

Table 1 – Key functions

4.4 Overview of Menu Structure

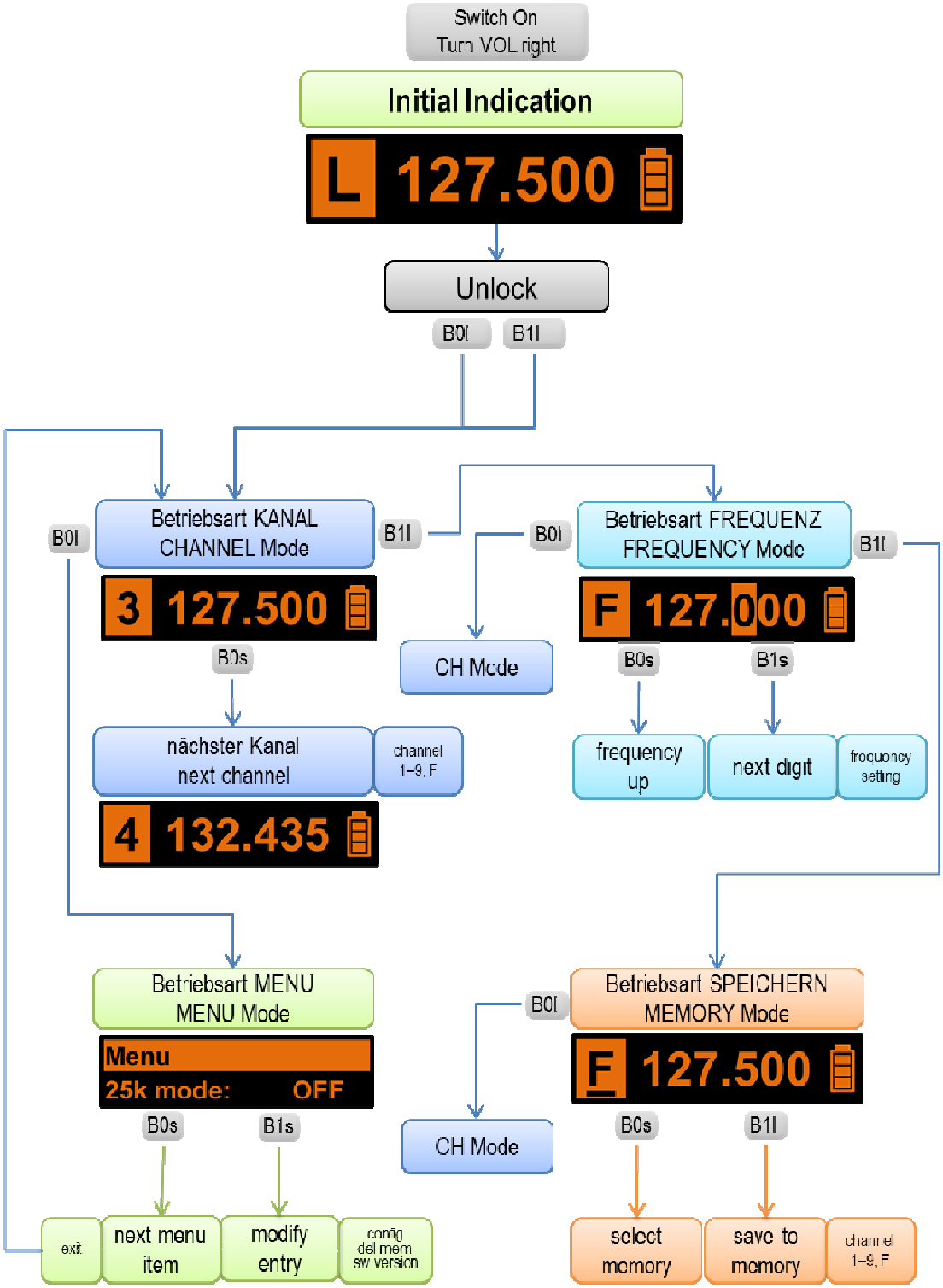

B0s Button left short push B1s Button right short push

B0l Button left long push B2l Button right long push

4.5 LOCKED Mode

Immediately after switching on, the FSG8 is always LOCKED and channel F is active.

As long as the FSG8 is connected to a charger, the last used channel is taken over after switching on. For a permanent takeover of the frequency after disconnection from the charger, the setting must be saved before.

The lock is released by simultaneously pressing both buttons ⑦ and ⑧ for 3 seconds. Then the device changes to the operating mode CHANNEL. The same procedure locks the radio again.

4.6 CHANNEL Mode

After unlocking, the FSG8 is in the CHANNEL mode by default.

In CHANNEL mode, the FSG8 allows to quickly change the channel from up to 10 pre-selected stations. Channels F and 1 to 9 are shown inverted on the left side of the display.

Each press of the left button ⑦ will switch to the next memory position. If a memory position is unused (empty), it will be left-out. Only in channel F a free entry of a frequency is feasible.

The channels only become visible in CHANNEL mode when a frequency has been stored by the user to the memory position of the channel. As a result, when programming only one frequency on the first channel, it is possible to quickly switch between two frequencies in CHANNEL mode.

If the frequency entry is aborted, the last entry is stored in channel F.

4.7 FREQUENCY Mode

In order to enter a frequency freely, the right button ⑧ must be pressed long in CHANNEL mode. The FSG8 then jumps from each channel to the FREQUENCY mode.

In this case, the FSG8 changes to channel F and displays the indicator F not inverted. Now the user can enter a frequency directly and shows the position to be changed inverted (dark number on light background) in the frequency display.

Initially, the 10 MHz value is displayed inverted (dark text, light background) and can be changed with a short press of the left button ⑦.

The next value (1 MHz) is selected with a short press of the right button ⑧ which then can be set with the left button ⑦.

When the last digit is set, another press of the right button ⑧ selects the 10 MHz value, again. A long press of the left button cancels the entry process and the shown frequency becomes the operating frequency.

At any time, pressing the PTT button ⑤ will use the currently shown channel as the operating frequency for transmissions. Reception is always performed on the currently indicated channel.

Attention: Only values that form an allowed frequency can be set. Therefore, it may be necessary to first set another digit before one digit can be set to the desired value.

For instance, if one wants to change from 132.000 MHz to 118.000 MHz it is necessary to first set the second digit to 2, then set the third digit to 8 and then set the second digit to 1.

This is necessary as the unit will immediately use any indicated frequency for reception.

The following table shows which values can be set for the third digit depending on the second digit setting:

Second Digit	Third Digit
1	8,9
2	0,1,2,3,4,5,6,7,8,9
3	0,1,2,3,4,5,6,7

4.8 MENU Mode

From the CHANNEL mode, pressing the left button ⑦ for 2 seconds will bring the FSG8 into MENU mode.

The menu points are displayed in two lines. The next menu point is shown in the second line.

In this mode, scrolling through the various entries in the menu is possible with the left button⑦. The right button ⑧ is used to modify a menu entry.

Following points in the menu are shown or can be modified:

Menu point	Setting	Description
25k mode	ON / OFF	switches to 25kHz channel spacing 25k mode: ON SQL-LVL: LOW
SQL-LVL	LOW/MID/HIGH	setting of squelch level SQL-LVL: MID Delete Ch.: 5
Delete Ch.:	-/1/2/3/4/5/6/7/8/9	deletes selected memory position Delete Ch.: 4 Sw-Ver.: 1.00
SW-Ver.:	X.XX	shows software version SW-Ver.: 1.00 SVN-Nr.: 32815
SVN-Nr.:	XXXXX	showe SVN-No. (5 digits) SVN-Nr.: 32815 Exit
Exit		back to CHANNEL mode SVN-Nr.: 32815 Exit

The last menu item is labelled "Exit". When this is selected and the right button ⑧ is pressed, the FSG 8 will go back to CHANNEL mode and displays channel F.

4.9 MEMORY Mode

Pressing the right button for at least 3 seconds in FREQUENCY mode, switches to the MEMORY mode and enables the storing of the indicated frequency into one of the 10 channel memories. This will cause the mode indicator to show underlined "**F** respectively **1 – 9**".

With the left button, the location can be selected where the channel shall be stored. The FSG8 will allow either to overwrite one of the already assigned memory positions or offer the next free position. E.g. when memory 1 and 2 are occupied, the FSG8 will offer memory position 1, 2 or 3.

When the desired station number is shown, pressing the right button for at least 3 seconds will write the current channel into that memory position and bring the FSG8 into CHANNEL mode using the selected channel. The LED status indication ⑨ shows the saving of the channel with a green light.

Alternatively, pressing the left button for at least 3 seconds will cause the FSG8 to leave the MEMORY mode and go back into CHANNEL mode without writing into any memory position.

5 ACCESSORIES

5.1 Overview

The accessory jack ③ allows connection of accessories for various applications and operating conditions.

When an external dynamic microphone of < 200 Ω DC impedance is connected, the built-in microphone is automatically switched OFF.

In noisy environment a second loudspeaker or a noise canceling headphone with at least 30 Ω is recommended.

5.2 Pin assignment

① Earphone/headphone/loudspeaker, at least 30 Ω

② Dynamic or special Electret microphone, 5 … 600 Ω

③ +11.7 … 15.1 V DC
input to charge the battery
output (switched) to supply VOX 90 and/or special Electret microphone
supply from 12 V DC car or aircraft battery.

④ Microphone Ground

⑤ Ground (minus power; GND for PTT, AF)

⑥ PTT button; common return by ⑤ (GND)

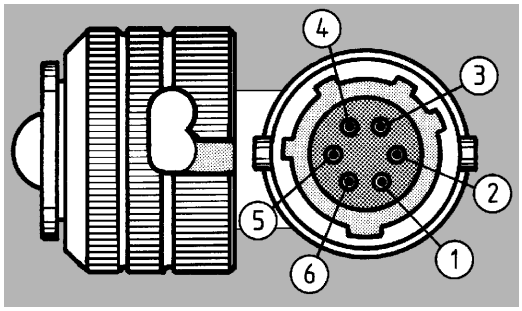

Accessory jack ③
top view

6 SHUTTING DOWN - STORAGE

For transport or storage switch off the device (volume switch ① to OFF). Storage of the radio should be done with fully charged batteries at an ambient temperature of 0 °C… +40 °C.

A self-discharge of the batteries in the off state is allowed.

Protect your radio from moisture and weather.

	Avoid deep discharge of the accumulators, as this can destroy the battery pack

	To avoid deep discharge of the accu pack, it should be charged every three months latest.

7 FUNCTIONAL CHECKS

7.1 Trouble Shooting

If the transceiver does not operate correctly, check the following:

- Is channel correctly set?
- Is battery capacity sufficient? Carry out a battery test without any charger connected!
- Weak signals? Switch OFF the squelch!
- Is the transceiver's helical antenna vertically held or is it screened by the operator's body?
- Operate radio without any accessory. Same malfunction?
- Are helical antenna or antenna plug/ cable damaged?
- Is voice level too low or distance to microphone too far?
- Does multipath effect occur? Change location.
- At radio interference change location. Suppress interference of your car/airplane.

In case of doubt, compare operation of the transceiver with another transceiver on the same location or call another station. Should the unit require service, please contact your nearest authorized dealer or certified repair station.

7.2 Siting

The radio operates in the VHF frequency band, this is a Line-Of-Sight (LOS) frequency; therefore, siting of the radio greatly affects its operating range. The longest range is normally obtained when a direct LOS is maintained between the radios. Use of hilltop or tower locations will increase the LOS range. Location in valleys with intervening hills, behind buildings or in dense woods may reduce or prevent communications. If possible, avoid locations near electrical interference sources, such as power and telephone lines, radar's, welders and electrical generators.

8 SAFETY INFORMATION

Every radio, when transmitting, radiates energy into the atmosphere that may, under certain conditions, cause the generation of sparks. All users of our radios should be aware of the following warning:

	**Do not operate radio near flammable liquids or nearby explosive devices.**

During normal use, the radio will subject you to radio energy substantially below the level where any kind of harm is reported.

To ensure personal safety, please observe the following simple rules:

- The radio **FSG8** can get hotter than + 50 °C / + 122 °F due to high ambient temperature, e.g. sunlight. Then use appropriate gloves to operate the radio!
- **DO NOT** transmit when the antenna is very close to, or touching, exposed parts of the body, especially the face and eyes.
- • **DO NOT** transmit inside vehicles or aircraft with the helical antenna, always operate the radio with a suitable external antenna. Assure appropriate lightning protection where elevated outdoor antennas are used.
- **DO NOT** hold the transmit (PTT) key in when not actually desiring to transmit.
- **DO NOT** allow children to play with any radio equipment containing a transmitter.
- **DO NOT** operate the radio whilst driving. It should also be noticed that the use of a hand held microphone while driving could constitute an offence under the Road Traffic Regulations.

9 FREQUENCY/CHANNEL PLAN

The following table lists some example values for indicated channel and the associated frequency. Please note that the same frequency has different channel indications depending on the operation mode (25 kHz or 8.33 kHz).

Frequency (MHz)	Channel spacing (kHz)	Indicated channel 25 kHz Mode	Indicated channel 8.33/25 kHz Mode
118.0000	25	118.000	118.000
118.0000	8.33		118.005
118.0083	8.33		118.010
118.0166	8.33		118.015
118.0250	25	118.025	118.025
118.0250	8.33		118.030
118.0333	8.33		118.035
118.0416	8.33		118.040
118.0500	25	118.050	118.050
118.0500	8.33		118.055
118.0583	8.33		118.060
118.0666	8.33		118.065
118.0750	25	118.075	118.075
118.0750	8.33		118.080
118.0833	8.33		118.085
118.0916	8.33		118.090
118.1000	25	118.100	118.100
118.1000	8.33		118.105
etc.	etc.		etc.

10 TECHNICAL DATA

Frequency range:	118.000 MHz … 136.975 MHz
Number of channels:	760 channels (25 kHz) 2278 channels (8.33 kHz), free selectable
Frequency accuracy:	< ± 1 ppm at -20°C … +55°C
RF carrier output:	1.5 Watt typ./ 50 Ω at 12 V_{Batt}
AF output power:	0.7 Watt / 8 Ω @ 12 Vdc
Sensitivity:	-103 dBm (SINAD 12 dB / m = 0.3)
AGC range:	≤ 6 dB / 5 µV … 100 mV / m = 0.3
Microphone threshold voltage	1.1 mV (m=0.85)
Charging voltage:	14.0 … 17.0 Vdc external
Built-in battery:	Ni-MH 12 Vdc / 1.5 Ah nominal
Operating time:	6 hrs at 80% RX / 20% TX
(Normal condition)	7 hrs at 90% RX / 10% TX
	17 hrs at 40% RX / 60% standby
Power consumption:	Transmit 500 mA typical
	Receive 200 mA typical
	Standby 14 mA typical
Operating temperature:	-10 °C … +55 °C / -4 °F … +131 °F (with battery pack E51388)
Charging temperature:	0°C … +40°C / +32 °F … 104 °F
Dimensions:	209 x 84 x 44.5 mm w/out antenna
Weight:	ca. 810 g / 1,8 lbs.
Via accessory jack:	Connection of battery charger, external 12 Vdc supply, protected 12 Vdc output for special accessory, additional dyn. microphone 5 to 600 Ω, additional ear/headphone min. 30 Ω, external PTT key.

Robust aluminum die-cast housing, sidetone via headphone, matrix LCD with 184(H) × 38(V) pixel for display of frequency and charging status.

11 LIST OF ACCESSORIES

Following articles can be ordered separately as accessory:

Article-No.	Article Name
F10198	NiMh/NiCad automatic rapid charger DL-5 A, 115/230 VAC, 250 mA, 4 hrs
F10059	NiMh/NiCad charger for FSG 4/5/8
F10027	12V car DC supply cable, coiled cord, 6-pole connector
F10044	Dyn. hand-microphone / loudspeaker, coiled cord, 6-pole connector, sealed
E24906	Holding clamp device for F10044
W00049	Dynamic headset, noise cancelling, coiled cord, 4-pole plug U-174/U
F10052	Inline PTT key U-94 A/U with clamp, coiled cord, for headset W00049 or helmet, 6-pole connector, for FSG4, FSG5, FSG8
W00044	Universal leather pocket for FSG4, FSG5, FSG8 with 1 carrying strap
W00023	Additional carrying strap for pocket W00044
W00043	Magnet mount antenna, 4m cable, UHF connector
W00114	Rod antenna, swivel type, 4 m cable, FME-connection
W00126	FME/TNC-Adapter for use with Rod Antenna W00114
F10035	Adapter cable for headset W00049, coiled cord, 6-pole plug / 4-pole socket
E08976	TNC antenna connector for RG-58C/U, solder type
11-9BP6P	Accessory connector for FSG4, FSG5, FSG8, 6-pole
E51388	NiMh replacement battery 12V/1.500 mAh, for FSG4, FSG5, FSG8
E51359	Spare helical antenna for FSG4, FSG5, FSG8

12 CERTIFICATION

Bundesaufsichtsamt
für Flugsicherung

Urkunde

Ein(e)	**Handfunkgerät für Bodenfunkstellen des Flugfunkdienstes**
Typ	**FSG8 in dem im Anhang zur Zulassungsurkunde festgelegten Konfigurationsständen.**
Frequenzbereich	**118 – 136,975 MHz**
Kanalraster	**8,33 kHz / 25,00 kHz**
der Firma	**f.u.n.k.e.AVIONICS GmbH Heinz-Strachowitz-Str. 4 86807 Buchloe**
für die Betriebsart	**6K80A3EJN (25 kHz) / 5K00A3EJN (8,33 kHz)**

ist auf Einhaltung der Anforderungen an Anlagen und Geräte für Zwecke der Flugsicherung gemäß § 4 Flugsicherungs-Anlagen- und Geräte-Musterzulassungs-Verordnung (FSMusterzulV) geprüft worden.

Die Anlage oder das Gerät entspricht damit den Festlegungen des Bundesministeriums für Verkehr und digitale Infrastruktur hinsichtlich Art, Umfang und Beschaffenheit von flugsicherungstechnischen Einrichtungen gemäß § 32 Abs. 4 des Luftverkehrsgesetzes sowie der Richtlinien und Empfehlungen der Internationalen Zivilluftfahrt-Organisation (ICAO).

Es wird daher als Muster mit den umseitig aufgeführten Auflagen in der Bundesrepublik Deutschland zugelassen.

Der Gerätetyp hat die Zulassungsnummer **D-0061/2019** erhalten.

Bundesaufsichtsamt für Flugsicherung
Langen, den15.07.2019

Im Auftrag

Bodo Heinzl

Bundesaufsichtsamt
für Flugsicherung

Anhang zur Zulassungsurkunde

D-0061/2019

Konfigurationsstand Ausgabestand 15.07.2019

Handfunkgerät FSG8

Typenbezeichnung	Part Number
FSG8	F10800 – (xxx) – (xxx)

Obligation:

The approval of the handheld radio FSG8 only applies to the configuration status listed in the appendix to the approval certificate.

The approval applies to devices starting from the Part Number variant:

F10800- (105) - (101)

The type approval does not replace the factory acceptance and technical / operational acceptance tests to be performed by the operator.

Compliance with the legal and technical requirements of the equipment for operational use shall be validated by the operator on the basis of the acceptance tests.

Nevertheless, the operator has to ensure the long-term security of the signals and reliabilities required for its operational use.

CTC advanced
member of RWTÜV group

Bundesnetzagentur
BNetzA-bS-02/51-52
authorized by the German Government to act as Notified Body in accordance with the RE Directive 2014/53/EU of 16 April 2014

Certificate Holder: f.u.n.k.e. AVIONICS GmbH
Heinz-Strachowitz-Str. 4
86807 Buchloe
Germany

Product Manufacturer: See Certificate Holder

Product Designation: FSG8

Product Description: Handheld VHF AM Airband Transceiver

Conformity Assessment:

Essential requirements	Examined documentation	Result
Safety RED, Article 3.1a	Technical documentation including test report	conform
Health RED, Article 3.1a	Technical documentation including test report	conform
EMC RED, Article 3.1b	Technical documentation including test report	conform
Radio spectrum RED, Article 3.2	Technical documentation including test report	conform

EU Type Examination Certificate:
In accordance with Annex III of the European Council Directive 2014/53/EU on radio equipment, our opinion is that this equipment type complies with the essential requirements stated above.

Marking:
The product shall be marked with the CE marking as required in the Council Directive 2014/53/EU.

Annexes:
The certificate is only valid in conjunction with the following number of annexes: 1

Validity:
Conformity is provided unless changes/modifications have been done to the standard and/or assessed type of equipment.

GERMAN NOTIFIED BODY
EUROPEAN ID-NO. 0682

Certificate Registration No.: T818488L-01-TEC

CE 0682

CTC advanced GmbH

Frank Muchitsch
cn=Frank Muchitsch, o=CTC advanced GmbH, ou=CTC-161125, email=frank.muchitsch@ctcadvanced.com, c=DE
2019.03.18 09:26:01 +01'00'

Saarbrücken

Authorized signature / title

13 EU DECLARATION OF CONFORMITY

EG-Konformitätserklärung zur Richtlinie 2014/53/EU
EG-Gebrauchstauglichkeitserklärung für Interoperabilitätskomponenten gemäß (EU) 2018/1139

EC-Declaration of Conformity to Directive 2014/53/EC
EC-Declaration of Suitability for use of interoperability constituents according to (EU) 2018/1139

CE-Déclaration de conformité à la directive 2014/53/CE
CE-Déclaration d'aptitude à l'emploi de constituants d'interopérabilité suivant (UE) 2018/1139

Hersteller: *Manufacturer/fabricant:*	**f.u.n.k.e. AVIONICS GmbH**
Anschrift: *Adress/adresse:*	**Heinz-Strachowitz-Str. 4, D-86807 Buchloe, Germany**
Produktbezeichnung: Product name: Nom du produit:	**VHF Bodenfunkstelle, Handfunkgerät, mobil** *Ground-based VHF transceiver, hand-held, mobile* *Émetteur-récepteur VHF au sol , portative, mobile*
Typen: *Types/types:*	**FSG 8**
Produktbeschreibung: *Product description:* *Description du produit:* 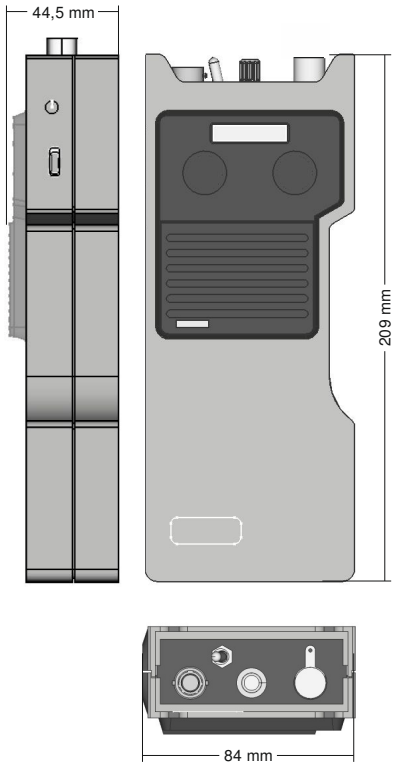 	VHF Handfunkgerät bestehend aus Hardware und Software (Firmware) zur Verwendung als mobile Bodenfunkstelle für den mobilen Flugfunk *VHF hand-held transceiver comprising hardware and software (firmware) to be used as a mobile ground radio station.* *Emetteur-récepteur portative VHF, comprenant le matériel et le logiciel (microprogramme) d'être utilisé comme une station de radio mobile* *Technische Daten:* • Gewicht: ca. 810 g • 25 KHz und 8.33 KHz Raster • Ausgangsleistung : typ. 1.5 Watt / 5 Watt PEP • Arbeits-Temperaturbereich: -10 bis +55 °C • Abmessungen: 209 x 84 x 44,5 mm (ohne Antenne) • Frequenzbereich: 118,000 bis 136,975 MHz • Abnehmbare Antenne (TNC-Anschluss, separates Zubehör): o E51359 Spiralantenne o W00043 KFZ-Magnethaftantenne o W00114 Stabantenne *Technical Data*: • *Weight: approx. 810 g* • *25 KHz and 8.33 KHz channel spacing* • *Output power : typ. 1.5 watts / 5 watts PEP* • *Operating temperature: -10 to +55 °C* • *Dimensions: 209 x 84 x 44.5 mm (without antenna)* • *Frequency range: 118.000 to 136.975 MHz* • *Detachable antenna (TNC connector, separate accessory):* *o E51359 Heliflex antenna* *o W00043 Magnetic vehicle antenne* *o W00114 Rod antenna* *Données techniques:* • *Poids: env. 810 g* • *espacement de 25 KHz et 8,33 KHz* • *Puissance de sortie: typ. 1,5 watts / 5 watts PEP* • *Température de fonctionnement: -10 à +55 ° C* • *Dimensions: 209 x 84 x 44,5 mm (sans antenne)* • *Gamme de fréquences: 118,000 à 136,975 MHz* • *Antenne amovible (connecteur TNC, accessoire séparé):* *o E51359 Antenne héliflex* *o W00043 Antenne véhicule magnéticque* *o W00114 Tige d'antenne*

Wir erklären in alleiniger Verantwortung, dass die oben bezeichnete Produkte mit folgenden Europäischen Richtlinien und Verordnungen übereinstimmen: *We declare under our sole responsibility that above products are in conformity with the following directives and regulations:* *Déclarons sous notre seule responsibilité, que les produits repondent aux directives et règlements suivantes:*	**2014/53/EG** **Funkanlagen-Richtlinie** *2014/53/EC* *Radio Equipment Directive* *2014/53/CE* *Directive RED* **(EU) 2018/1139** **Verordnung Zivilluftfahrt** *(EU) 2018/1139* *Regulation Civil Aviation* *(UE) 2018/1139* *Règlement de l'aviation civile* **(EU) 1079/2012** **Durchführungsverordnung Sprachkanalabstand** *(EC) 1079/2012* *Implementing Regulation Voice Channel Spacing* *(CE) 1079/2012* *Règlement d'exécution espacement des canaux de communication vocale*
Angewandte harmonisierte Normen und technischen Spezifikationen: *Applied harmonised standards and technical specifications:* *Normes harmonisées et spécifications techniques:*	**EN 50665:2017** **ETSI EN 301 489-1 V2.2.0** **ETSI EN 301 489-22 V1.3.1** **ETSI EN 300 676-1 V1.5.2** **ETSI EN 300 676-2 V2.1.1** **DIN EN 62368-1: 2014/AC: 2015/A11: 2017** **SSB FL 021 - Bundesnetzagentur:** Schnittstellenbeschreibung für Bodenfunkstellen des mobilen Flugfunkdienstes (AM Sprechfunkanlagen) im Frequenzbereich 117,975-137 MHz
Verfahren zur Bewertung der Konformität: *Conformity assessment procedures:* *Procédures d'évaluation de la conformité:*	**2014/53/EG: Verfahren gemäß Anhang III;** **(EU) 2018/1139: Module B + C (EG-Baumusterprüfung + Konformität mit Bauart) nach 768/2008/EG** *2014/53/EC: procedure laid down in Annex III* *(EU) 2018/1139: Module B + C (EC-type examination + conformity to type) according to 768/2008/EC* *2014/53/CE: procédure prévue à l'annexe III;* *(UE) 2018/1139: Module B + C (examen CE de type + conformité au type) suivant 768/2008/CE*
Benannte Stelle gemäß 2014/53/EG und Nummer der EG Baumusterprüfbescheinigung: *Notified Body acc. to 2014/53/EC and number of the EC type examination certificate:* *Organisme agreé á 2014/53/CE et número dú certificate des test CE:*	**CTC advanced GmbH, No. 0682** **Certificate Registration No.: T818488L-01-TEC**
Ort, Datum der Ausstellung *(Place, date of issue)/ (Lieu, date de lédition)*	**Buchloe, 14.12.2022**
Revision:	**1.4**

Der Hersteller erklärt hiermit, dass die oben beschriebene Komponente bezüglich ihrer intrinischen Konformität bewertet wurde und die angewandten gemeinschaftlichen Spezifikationen erfüllt.
The manufacturer hereby declares that the constituent described above was assessed with regard to its intrinsic conformity and meets the applicable Community specifications.
Le fabricant déclare par la présente que le constituant décrit ci-dessus a été évalué en ce qui concerne sa conformité intrinsèque et répond aux spécifications communautaires applicables.

Diese Erklärung bezieht sich auf die Betrachtung der Gebrauchstüchtigkeit innerhalb des Flugverkehrsmanagmentumfeldes zur VO (EU) 2018/1139.
This statement refers to the consideration of the suitability for use within the air traffic management environment to regulation (EU) 2018/1139.
Cette déclaration se réfère à l'examen de l'aptitude à l'usage au sein de l'environnement de gestion du trafic aérien au règlement (UE) 2018/1139

Dr. Thomas Wittig

Geschäftsführer f.u.n.k.e. AVIONICS GmbH
Managing Director f.u.n.k.e. AVIONICS GmbH
Directeur f.u.n.k.e. AVIONICS GmbH

Name und Unterschrift des Befugten
Name and signature of authorized person
Nom et signature de la personne autorisée

14 ATTENTION – CONDITIONS OF USAGE

Das handheld transceiver FSG8 works on frequencies that are regulated and not permitted to be used without authorisation in the EU countries shown in the table below.

Users of this equipment should check with their local spectrum management authority for licensing conditions applicable for this equipment.

AT	BE	BG	CY	CZ	DE
DK	ES	EE	FI	FR	GB
GR	HR	HU	IE	IT	LT
LU	LV	MT	NL	PL	PT
RO	SK	SI	SE	CH	IS
LI	NO	-	-	-	-

15 RELIABILITY INFORMATION

For normal operating conditions (0°C to 40°C) as a mobile ground station, the calculated MTBF (Mean Time Between Failures) is > 13 000 hours (according to MIL-HDBK-217F).

The average repair time MTTR (Mean Time to Repair) is approx. 2 weeks, including transportation and the time for repair or replacement of the device.

16 DISPOSAL

Umweltinformationen für Kunden innerhalb der Europäischen Union
Regulatory and Compliance/WEEE Legislation within the European Union

Gemäß der Europäischen Richtlinie 2002/96/EG über Elektro- und Elektronik-Altgeräte (WEEE) und die Änderung 2008/34/EG dürfen Produkte, die direkt am Gerät und/oder an der Verpackung mit diesem Symbol versehen sind, nicht zusammen mit gewöhnlichem Abfall entsorgt werden, sondern sind über die für elektrische und elektronische Geräte zuständigen und von der Regierung oder örtlichen Behörden dazu bestimmten Sammelstellen zu entsorgen. Ordnungsgemäßes Entsorgen und Recyceln trägt dazu bei, potentielle negative Folgen für Umwelt und die menschliche Gesundheit zu vermeiden. Wenn Sie weitere Informationen zur Entsorgung Ihrer Altgeräte benötigen, wenden Sie sich bitte an die örtlichen Behörden oder städtischen Entsorgungsdienste oder an den Händler, bei dem Sie das Produkt erworben haben.

According to the European directive 2002/96/EC on waste electrical and electronic equipment (WEEE) an the amendment 2008/34/EC: Products, that are marked with the above symbol directly at the device and/or at the packaging, may not to be disposed together with ordinary waste, but have to be disposed using the appropriate differentiated collection centres for electronic and electro waste. Appropriate differentiated waste collection and recycling helps to prevent possible negative environmental and health effects. If you need additional information about the disposal of your products after the end of their working life, please contact your local authorities or municipal waste disposal organisation, or the dealer you have purchased the product from.

Notes:

f.u.n.k.e.
AVIONICS GMBH

f.u.n.k.e. AVIONICS GmbH
Heinz-Strachowitz-Str. 4
DE-86807 Buchloe
Germany

phone.: +49-8241 80066 0
fax.: +49-8241 80066 99
E-mail:
service@funkeavionics.de
www.funkeavionics.de