f.u.n.k.e.
AVIONICS GMBH

# FSG80

## VHF Communication Transceiver
## for Ground Operation


P/N FSG80-(xxx)-(xxx)

# Operation and Installation

Dokument-Nr. 01.145.010.71e

## Change History

| Revision | Date | Description of Change |
|---|---|---|
| 1.00 | 25.01.2024 | First Release for Head-SW 2.00 / NF-FW 2.00 |
| | | |
| | | |
| | | |
| | | |
| | | |

## List of Service Bulletins (SB)

| Service-Bulletins are to be inserted in the manual and to be recorded in this table | | | | |
|---|---|---|---|---|
| SB Number | Rev. No. | Date of Issue | Entry Date | Name |
| | | | | |
| | | | | |
| | | | | |
| | | | | |

# CONTENT

# 1 GENERAL

This manual contains information about the physical, mechanical and electrical characteristics, as well as information about installation and operation of the VHF voice radio FSG80.

## 1.1 Symbols

| | |
|---|---|
|  | Advices whose non-observance can cause radiation damage to the human body or ignition of combustible materials. |

| | |
|---|---|
|  | Advices whose non-observance can cause damage to the device or other parts of the equipment. |

| | |
|---|---|
|  | Information |

## 1.2 Abbreviations

| Abb. | Name / Subject | Definition |
|---|---|---|
| BRT | Brightness | Display Brightness |
| EXT | External Audio Input | Volume of external audio input |
| MIC | Microphone | Sensitivity of Microphone |
| PTT | Push-To-Talk | Button to activate radio transmission |
| SEL | Selection | Selection of value or function |
| SQL | Squelch | Noise suppression radio reception |
| VOL | Volume | Volume of radio reception |

## 1.3 Customer Support

In order to facilitate a rapid return of shipments in case of repairs, please follow the instructions of the input guide “Reshipment RMA” provided at the Service-Area within the f.u.n.k.e. AVIONICS GmbH web portal www.funkeavionics.com.

| | |
|---|---|
| | Any suggestions for improvement of our manuals are welcome. Contact: service@funkeavionics.com. |

| | |
|---|---|
| | Information on software updates is available at f.u.n.k.e. Avionics GmbH. |

## 1.4 Equipment Characteristics

- VHF communication transceiver with 6W output power in 2 ¼” format
- Frequency range 118,000 to 136,975 MHz
- 2 microphone inputs (auto detection standard or dynamic)
- Dual-watch technology, simultaneous monitoring of two frequencies
- Auxiliary audio input
- Digital output for signaling reception
- Digital output for runway lightning
- Memory for 20 user-definable named frequencies
- Easy recall of the 10 last used frequencies
- High contrast LCD display 128x64 dot matrix
- Wide range power supply 11 – 30 VDC
- Configurable energy saving mode

| | |
|---|---|
| | The FSG80 is only certified as ground radio. It has no certification for on-board usage in an aeroplane. For this the almost identical ATR833-II is available. |
| | To avoid unintentional permanent transmission, the transmitter automatically stops transmission after 35 seconds of uninterrupted operation. |

# 2 OPERATION

## 2.1 Overview of Controls

Position and naming of control elements:

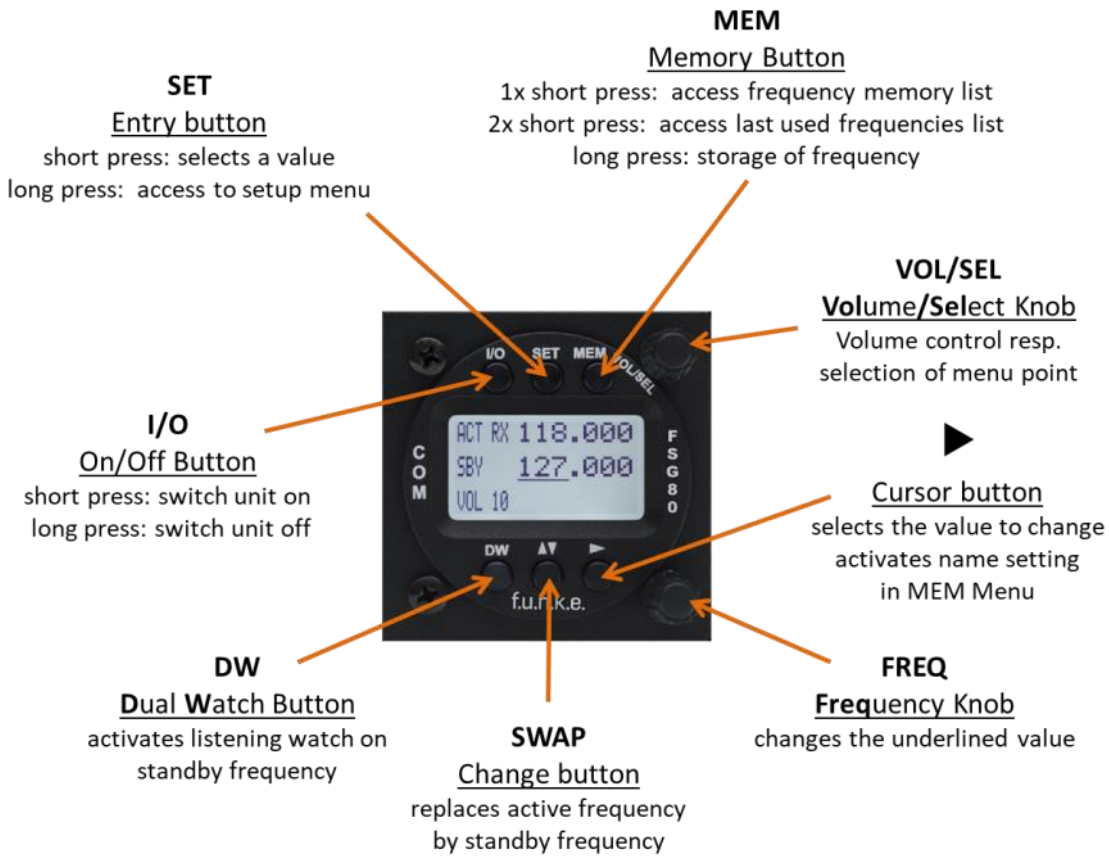


The control elements have following functionality:

| | | |
|---|---|---|
| **I/O** | ON/OFF | Switch On press button for appr. 0,5 s<br>Swich Off press button for appr. 3 s |
| **DW** | DUAL WATCH | Activates/deactivates the mode for mutual reception of standby frequency (display shows DW instead of SBY) |
| **SET** | INPUT | 1. Navigation through the standard menu (VOL, SQL, etc.) (adjustment of value with VOL/SEL, short press of SET for next value<br>2. Access to setup menu<br>→ Press button for min. 5 seconds<br>3. Navigation through the setup menu (Spacing, backlight, DW Mute, PTT Select,.) |

| | | |
|---|---|---|
| ▶ | CURSOR | 1. Marking (underline) of value for adjustment; value changeable with FRQ or VOL/SEL → Enter and continue with Cursor Button ▶ short press<br>2. Activates in MEM menu the entry of names<br>3. Long press (>2s) activates Replay |
| ▼▲ | SWAP | Changes Active with Standby-Frequency |
| **MEM** | Memory | Access to frequency list (MEM-List) → press button shortly once |
| | | Access list of 10 last used frequencies (LST-List) → press button shortly twice |
| | | Stores Standby frequency to selected memory (in MEM-List) → press button for 2 seconds |
| VOL/SEL | **VOL/SEL** Turn knob | 1. Adjust volume or other item selected by **SET** (VOL, SQL, DIM etc.)<br>2. Select frequency from user memory or list of last used frequencies |
| FREQ | **FREQ** Turn knob | Change the underlined value (i.e. adjust standby frequency, or input character when entering name) |

## 2.2 ON/OFF - Commissioning

Turn the device on with **I/O.**

Switch On: **I/O** press for appr. 0.5 seconds
Switch Off: **I/O** press for appr. 3 seconds

After turning on, following information appears on the display:

**FSG80**

**Welcome**

The start screen indicates device type and software version. After that screen the device changes into normal operation (direct input mode).

The radio starts with the same frequencies and settings from before being switched off.

## 2.3 Display

The FSG80 shows the frequencies and the operating condition on a matrix LCD display with 128 x 64 pixels.

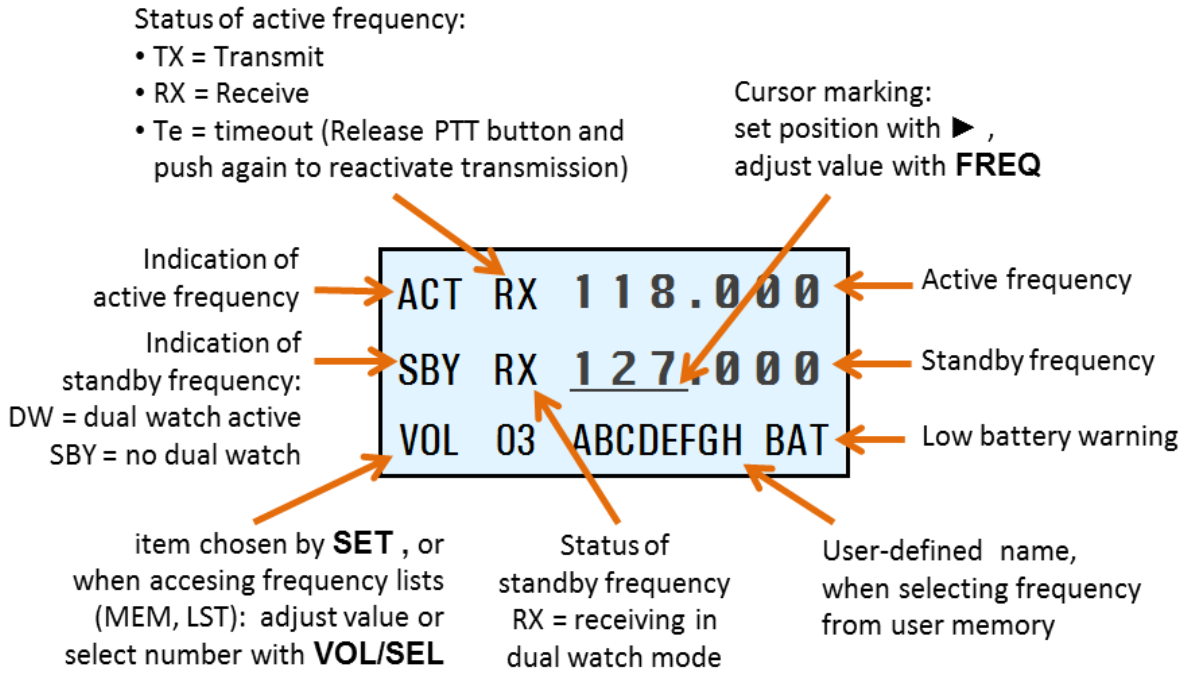


| Display | Meaning | Remark |
|---|---|---|
| ACT | Fixed label for active frequency | |
| SBY | Label for standby frequency, when dual watch is not activated | |
| DW | Label for standby frequency: dual watch mode is activated | Dual watch mode allows intermittent monitoring of standby frequency activity |
| 118.000 | Active Frequency | Frequency used for trans-missions and receptions |
| 124.910 | Standby frequency | May be monitored in dual watch mode |
| RX | Receiving on this frequency | Usually on active frequency; can also happen on standby frequency when DW is activated |
| TX | Transmitting on active frequency | PTT pressed |
| Te | Automatic stop of transmission after 35s of continuous trans-mission | Release PTT shortly and press again to re-enable transmission. |

| Display | Meaning | Remark |
|---|---|---|
| VOL *03* | Volume level for receiving (standard display) | If SEL was pressed, the appropriate value of the standard menu are displayed at this position (see 2.5) |
| SQL *03* | Squelch level | Radio signal strength threshold required for reception; suppresses noise and weak/distant transmitter |
| DISPLAY *on* | Timer for backlight resp. display brightness | Activates energy saving mode |
| DUOWATCH *-2* | Dual Watch Mute | Reduction in volume for dual-watch-reception on standby frequency |
| EXT *02* | Volume of external audio signals | Set to 00, if no external device is connected, to prevent noise pickup |
| BRT *07* | Brightness of display | |
| CON *05* | Contrast of display | only for LCD |
| MEM *00* | Item from user defined frequency list | Substitutes Standby Frequency; Active frequency can be stored into this entry with long press on **MEM** |
| LST *00* | Item from list of last used frequencies | Substitutes standby /active frequency with press of **SET** / ▼▲ button. |
| *ABCDEFG* | User-defined name in the frequency list | Displayed while selecting from user memory, when the user has assigned a name. |
| BAT | Very low supply voltage | Transmission only with reduced power possible (decreased radio range!) |
| ≫REPLAY≫ | Playback radio call | Replays the last radio call (max. 9 seconds) |

## 2.4 Frequency Setting

Frequency setting is always done by the two steps of

1. Entering a new standby frequency to the desired value, and then
2. Interchanging the new standby frequency and the previous active frequency by using the swap button ▼▲.

Entering a new standby frequency can be done by

a) Manual input,

b) Recall of previously stored frequencies from the user memory (memory locations 1-20), or

c) Recall from the list of the last 10 used frequencies.

### 2.4.1 Automatic Selection 8.33 / 25 kHz Channel Bandwidth

Whether a frequency is used with channel width 8.33 kHz or 25 kHz, is automatically determined by the value of the frequency entered, and requires no additional user activity.

The numbering scheme that is used for distinction of the two channel widths is internationally standardized by the ICAO, and consistently used in official documents (like e.g. VFR navigation charts) as well as in the voice phraseology used by ATC radio communication.

Channels used with 25 kHz width are entered in multiples of 25kHz: 123.500, 123.525, 123.550, 123.575, 123.600 etc. These are compatible with the old 25 kHz-only radios. To use the same frequencies with 8.33 kHz width, the frequency values entered are increased by 5kHz: 123.505, 123.530, 123.555, 123.580, 123.605 etc.

For more detailed information please refer to chapter 5 – but as said above, for correct channel width selection this knowledge is not required.

### 2.4.2 Manual Frequency Input

The standby frequency is input by

- Selecting with the ► button which part of the frequency to change, and
- Changing the selected part with the **FREQ** rotary knob.
- The swap button ▼▲ interchanges the newly set standby frequency and the former active frequency.

| | |
|---|---|
| | In order to speed up the entering of new frequencies, it is possible to configure the radio to allow entering of those frequencies only that are used with 25 kHz channel width.<br>Please refer to chapter 3.1 for information on this configuration. |

| | |
|---|---|
| | However, when choosing this option, please keep in mind to re-enable 8.33 kHz channel selection before flying into areas where 8.33 kHz channels are used. |

When having the channel selection configured for 8.33 kHz steps (see 0), the frequency is input in three steps:

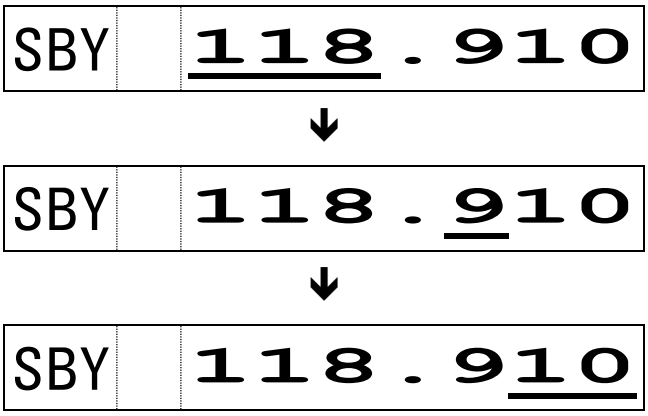


### 2.4.3 Recall a Frequency from the User Memory

To access the user memory frequency list, press **MEM** once, and select one of the 20 memory entries with the **VOL/SEL** turn knob.

The selected memory entry is shown instead of the standby frequency.

In the lower row of the display, the number of the memory entry selected is indicated by [MEM xx] (with xx = 1 to 20); if a name has been provided by the user for this memory entry, it is displayed next to the memory entry number.

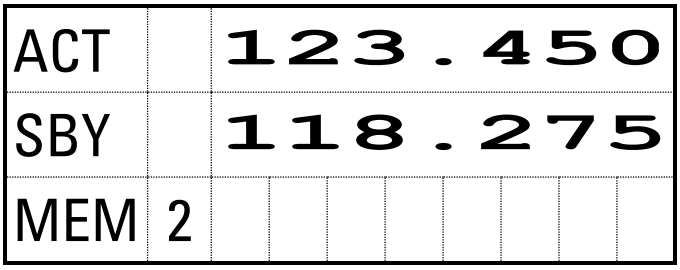


Range: 01 - 20

Respectively:

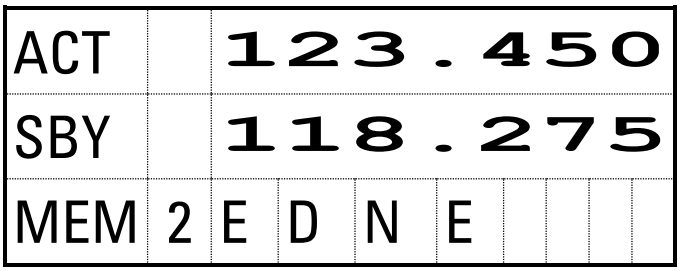

A push on the swap button ▼▲ replaces the Active Frequency, a press on the **SET** button the Standby Frequency with the selected list entry.

If no input is done for 10 seconds, the device returns to the standard view, too.

### 2.4.4 Recall a Frequency from the List of the 10 Last Used

The radio automatically keeps track of the last 10 used active frequencies. To access this list, press **MEM** twice, and select one of the 10 list entries with the **VOL/SEL** turn knob. The selected memory entry substitutes the former standby frequency.

The number of the selected list entry is given in the display's lower row.

| | | |
|---|---|---|
| ACT | | 123.450 |
| SBY | | 118.275 |
| LST | 2 | |

↳ Range: 1 - 10

Respectively:

| | | |
|---|---|---|
| ACT | | 123.450 |
| SBY | | 118.275 |
| LST | 2 | E D N E |

↳ ↳ ↳ ↳ ↳ ↳ ↳ ↳ ↳ 8 digits A-Z, 0-9

| | |
|---|---|
| ℹ | List entry "1" contains the last standby frequency from the MEM menu. |

If there is no input for 10 seconds, the device returns to the standard view.

### 2.4.5 Storage of a Frequency into the User Memory

The active frequency can be stored into any entry of the user memory.

This is achieved by a long press of 1,5 seconds on **MEM.** The previous memory entry will be be overwritten.

The following example stores the frequency 124.350 MHz of KONSTANZ (EDTZ) into the user memory 7:

| Step | Display (example) |
|---|---|
| 1. <u>Tune in frequency:</u><br>Have frequency to be stored set as standby frequency | ACT 118.275<br>SBY 124.350<br>VOL 05 |
| 2. <u>Enter memory list:</u><br>With a long press on **MEM** the frequency can be stored to the user memory. | ACT 118.275<br>SBY 124.350<br>MEM saveTo 1 |
| 3. <u>Select memory position:</u><br>Selection of the decided memory position with **VOL/SEL** | ACT 118.275<br>SBY 124.350<br>MEM saveTo 7 |
| 4. <u>Overwrite the selected memory :</u><br>With a **short press** of **MEM** the standby frequency is stored at the selected position.<br>A preceding **>** shows the successful storage to the memory position. | ACT 118.275<br>SBY > 124.350<br>MEM 7 |

To exit the frequency list, press **DW** or wait 10 seconds until time-out.

To every frequency entry a name can be assigned with up to 8 characters, which is shown right of the entry.

| | |
|---|---|
| To assign a name to a memory entry, the appropriate entry must be selected. The next steps follow directly step 4 from above.<br>5. <u>Change of name entry:</u><br>A long press of the Cursor button ▶ enables the entry of a name | ACT 118.275<br>SBY > 123.450<br>MEM 07 |
| 6. <u>Enter the name:</u><br>By changing the selected character with **FREQ**, and advancing the selection with ▶, just as when manually entering a standby frequency. | ACT 118.275<br>SBY > 123.450<br>MEM 7 E D T Z |
| 7. <u>Store the name:</u><br>The new entry is either stored with a long press of **MEM** or by a short press on the Cursor button ▶. | ACT 118.275<br>SBY > 123.450<br>MEM 7 E D T Z |

To exit the frequency list press the **SET** button or wait 10 seconds until time-out.

### 2.4.6 ATR Frequency Tool

The ATR Frequency Tool from Version 1.5 supports the FSG80. With the tool the frequency memory of the FSG80 can be managed, i.e. frequencies can be added, edited and deleted. The frequency list can be stored as a file.

The ATR Frequency Tool can be downloaded from the f.u.n.k.e. AVIONICS homepage in the service area under Info / Download.

## 2.5 Basic Settings

To choose between the following settings, use the **SET** button:

1. VOL Volume (chosen by default)
2. SQL Squelch (noise suppression)
3. STL Volume Sidetone left
4. STR Volume Sidetone right
5. EXT Volume of external audio signals
6. BRT Display brightness
7. CON Display contrast

… back to Volume

The return to the default display (VOL) is carried out by a short press on the Dualwatch button **DW** or happens automatically after 10 seconds of inactivity.

The chosen setting can be adjusted by the **VOL/SEL** rotary knob.

### 2.5.1 VOL – Volume

Turning the **VOL/SEL** knob adjusts the volume of received radio signals. The higher the value, the louder the reception of radio signals.

| | | |
|---|---|---|
| ACT | | 123.450 |
| SBY | | 118.275 |
| VOL | 2 | |

↳Range: 1 – 20

| | |
|---|---|
| | The VOL setting controls the volume of received radio signals only, not the volume of the external audio input – these are set separately with EXT. |

### 2.5.2 SQL – Squelch (noise barrier)

By shortly pressing the **SET** key once, with the help of the rotary knob the squelch level can be adjusted.

This is a threshold that has to be exceeded by radio signal levels from other transmitters, in order to activate the reception circuitry. The higher the number, the stronger the radio signals have to be in order to be received.

| | | |
|---|---|---|
| ACT | | 123.450 |
| SBY | | 118.275 |
| SQL | 2 | |

↳Range: 0 - 9

The setting for the squelch depends on different factors, like environmental noise. A lower number means higher input sensitivity.

This allows reception of weaker signals (radio stations at higher distance), but can also result in pickup of radio interference sources (power supplies, engine, strobe lights).

| | |
|---|---|
| ℹ | The default squelch setting is 5. At higher values weak signals could be suppressed. |

### 2.5.3 ST1 – Volume Sidetone Headset 1

The sidetone is a self-hearing or back-hearing function during transmission. The audio signal picked up by the microphone is fed directly to the headset, which is normally perceived as pleasant. In this menu point the volume of the sidetone for the headset at connection 1 can be adjusted.

| | | |
|---|---|---|
| ACT | | 123.450 |
| SBY | | 118.275 |
| ST1 | 4 | |

↳Range: 0 - 20

### 2.5.4 ST2 – Volume Sidetone Headset 2

By pressing the **SET** button three times you get access to the ST2 menu. Here the volume of the sidetone for the headset at connection 2 can be adjusted.

| | | |
|---|---|---|
| ACT | | 123.450 |

| | | |
|---|---|---|
| SBY | | 118.275 |
| ST2 | 4 | |

↳Range: 0 – 20

### 2.5.5 EXT – Volume of the external Audio Input

By shortly pressing the **SET** key four times, the volume of external audio signals (warning tones, music, etc. …) can be controlled with the rotary knob.

The higher the value, the higher is the volume of the external audio signal. A value of **EXT** = 0 deactivates the external audio input.

| | | |
|---|---|---|
| ACT | | 123.450 |
| SBY | | 118.275 |
| EXT | 5 | |

↳Range: Off, 1 - 20

| | |
|---|---|
| | When no other device is connected to the external audio input, the input should be muted by selecting “Off”, in order to prevent noise by pickup of potential interferences. |

| | |
|---|---|
| | The priority of the external audio input in comparison to radio receptions can be configured, see chapter 3.5. |

### 2.5.6 BRT – Brightness

By pressing the **SET** five times the brightness of the backlight of the LCD display can be adjusted with the VOL/SEL turn knob.

| | | |
|---|---|---|
| ACT | | 123.450 |
| SBY | | 118.275 |
| BRT | 5 | |

↳Range: 0 - 9

### 2.5.7 CON – Contrast

By pressing the **SET** eight times the last configuration item is reached in the standard menu, where the contrast of the display can be adjusted with the **VOL/SEL** turn knob.

| | | |
|---|---|---|
| ACT | | 123.450 |
| SBY | | 118.275 |
| CON | 5 | |

↳Range: 0 - 9

## 2.6 Transmission

By pushing the PTT button, the device starts transmission on the active frequency. The operation of the transmission is indicated by “TX” in front of the frequency used.

| | | |
|---|---|---|
| ACT | TX | 123.450 |
| SBY | | 118.275 |
| VOL | 5 | |

In order to avoid unintended transmissions, e.g. when having the PTT button stuck (“stuck mic”), the transmitter automatically stops after 35 ±5 seconds of transmission, and „TX“ is substituted by „Te“.

| | | |
|---|---|---|
| ACT | Te | 123.450 |
| SBY | | 118.275 |
| VOL | 5 | |

In order to re-enable transmission in this case, release PTT and push it again.

When having more than one PTT button and microphone equipped, it can be configured (chapter 3.3) to use only one PTT button for transmissions.

## 2.7 Reception

When receiving, a „RX“ is shown in front of the active frequency.

| | | |
|---|---|---|
| ACT | RX | 123.450 |
| SBY | | 118.275 |
| VOL | 5 | |

When having dual watch active (see 3.4) RX can be shown on the standby frequency, too.

| | | |
|---|---|---|
| ACT | | 123.450 |
| DW | RX | 118.275 |
| VOL | 5 | |

## 2.8 REPLAY Funktion

The FSG80 automatically stores the last 9 seconds of an incoming radio call. Pressing the CURSOR key ▶ will play the last received radio message. The display will show » R E P L A Y » for the duration of the playback.

| | | |
|---|---|---|
| ACT | | 123.450 |
| DW | | 118.275 |
| VOL | 5 | » R E P L A Y » |

As long as a radio call is received, the REPLAY function is deactivated. This also means that the squelch setting must not be zero.

## 2.9 DUAL WATCH Operation

The FSG80 comprises one receiver; therefore “dual watch” (simultaneously monitoring two frequencies) is implemented by alternating automatically between the active and the standby frequency.

With dual watch mode active, basically the standby frequency is tuned in, shortly interrupted in regular intervals by tuning in the active frequency for a fraction of a second.

Every then detected radio signal on the active frequency has priority, and pauses the dual watch monitoring of the standby frequency, as long as the reception/transmission continues on the active frequency.

Transmissions are always done one the active frequency.

The dual watch mode is activated by pressing **DW**, and indicated by a changing the “**SBY**” label for the standby frequency to “**DW**”.

| | | |
|---|---|---|
| ACT | RX | 123.450 |
| DW | | 118.275 |
| VOL | 5 | |

The dual watch mode is deactivated by pressing **DW** again, and by any operations changing either of the frequencies.

| | |
|---|---|
| | SQL has to be set to 01 at least, as without adequate squelch functionality the radio is not able to detect if there is a reception on the active frequency. |

In order to have an audible distinction between receptions on the active and the standby frequency, it is possible to hear the receptions from the standby frequency with a lower volume. Please refer to chapter 3.4. for information about the feature “dual watch volume reduction”.

**Quick approach:**

- Select or enter a standby frequency which shall be additionally monitored.
- Set **SQL** with the **SET** button and the rotary knob to a value of at least 01.
- Activate dual watch with **DW** (**DW** is shown)
- As soon as no reception is determined on the active frequency, the mutual monitoring between active and standby frequency starts.
- In order to deactivate dual watch: press **DW** once more or change the frequency.

| | |
|---|---|
| | Don’t forget to interchange the active and standby frequencies, before answering a call on the standby frequency. |

## 2.10 Digital Outputs

### 2.10.1 Reception signaling

The digital output SQUELCH OPEN (pin 10 at the device connector) is set to high when a radio signal is received which opens the squelch. If the squelch is deactivated, the output signal is always high.

### 2.10.2 Runway lightning

When the FSG80 detects three times an opening and closing of the squelch within five seconds, the signal RUNWAY LIGHTNING (pin 7 at the device connector) is set to high for one second. This can be used for the activation of a runway lightning.

# 3 CONFIGURATION

A very long press of **SET** (5 seconds) accesses the configuration menu. The configuration menu is used for fundamental settings.

To choose between the following settings, use the **SET** button:

| | | |
|---|---|---|
| 1. | SPACING | Channel spacing |
| 2. | DISPLAY | Display darkening (power save mode) |
| 3. | PTT SLCT | PTT button selection |
| 4. | DUOWATCH | Dual Watch muting |
| 5. | EXTAUDIO | Behaviour of the external audio input |
| 6. | MIC1 TYP | Microphone type 1 |
| 7. | MIC1 std | Microphone sensitivity 1 (for standard mic.) |
| 8. | MIC1 dyn | Microphone sensitivity 1 (for dynamic mic.) |
| 9. | MIC2 TYP | Microphone type 2 |
| 10. | MIC2 std | Microphone sensitivity 2 (for standard mic.) |
| 11. | MIC2 dyn | Microphone sensitivity 2 (for dynamic mic.) |
| 12. | SPK MODE | Disabling of speaker |
| 13. | AUTO ON | Automatic power on with supply voltage |
| 14. | FW | Firmware version (processor) |
| 15. | SW | Software version (control head) |

Return to the standard mode (**VOL**) is done by a short press of the **I/O**, **DW**, ▼▲ or ▶ button or automatically 10 seconds after the last entry (time-out).

The selection of the values is done with **VOL/SEL** turn knob.

## 3.1 SPACING – Channel Spacing

With this setting, the FSG8 can be configured to constrain frequency selection to 25 kHz channels only. This can be used to speed up the manual frequency input in areas where no 8.33 kHz channel spacing is used (see also chapters 2.4.1 and 2.4.2).

Using the **VOL/SEL** turn knob following options can be selected in this submenu:

**8.33 kHz**: allows input of both 8.33 kHz and 25 kHz channels

| | | |
|---|---|---|
| ACT | RX | 123.450 |
| SBY | | 118.275 |
| SPACING | | 8.33kHz |

**25 kHz**: allows input of 25 kHz channels only

| | | |
|---|---|---|
| ACT | RX | 123.450 |
| SBY | | 118.275 |
| SPACING | | 25kHz |

A short press of SET switches to the next configuration item.

## 3.2 DISPLAY – Energy Saving Mode (Automatic Display Darkening)

In order to minimize power consumption the backlight of the LCD display can be switched off after a selectable time period, respectively the brightness of the OLED display is reduced.

With the **VOL/SEL** turn knob following options can be selected:

**ever on**: no display darkening at all

| | | |
|---|---|---|
| ACT | RX | 123.450 |
| SBY | | 118.275 |
| DISPLAY | | ever on |

**off xxx s**: automatic display darkening after xxx seconds after last user interaction (xxx= 10s, 20s, 30s, 60s, 120s)

| | | |
|---|---|---|
| ACT | RX | 123.450 |
| SBY | | 118.275 |
| DISPLAY | | off 10s |

Reactivation of the darkened display is done by press of any key (except key **I/O**) or turn of any knob (the action of the key pressed is performed when pressing the key again after the display turned on) or when transmitting.

A short press of **SET** switches to the next configuration item.

| | |
|---|---|
| | This feature should only be used when the users are familiar with the energy saving mode<br>In all other cases this feature shall be deactivated, in order to prevent the usage of wrong frequencies and to avoid confusion of users not aware of the energy saving mode. |

## 3.3 PTT SELECT - Button Selection

In case of using two external PTT buttons, this configuration item can be used to deactivate one PTT button – and the associated microphone(s) – from enabling transmission.

With the **VOL/SEL** rotary knob the following options can be selected:

**all mics**: both PTT buttons and all microphones are used for transmissions, no matter what PTT button was pressed.

| | | |
|---|---|---|
| ACT | RX | 123.450 |
| SBY | | 118.275 |
| PTT SLCT | | all mics |

**one mic**: according to the PTT button pressed, the associated microphone is activated

| | | |
|---|---|---|
| ACT | RX | 123.450 |
| SBY | | 118.275 |
| PTT SLCT | | one mic |

**mic 1 only:** only the left PTT button and the microphone(s) at connection 1 are used for transmissions

| | | |
|---|---|---|
| ACT | RX | 123.450 |
| SBY | | 118.275 |
| PTT SLCT | | mic 1 only |

**mic 2 only**: only the PTT button and the microphone(s) at connection 2 are used for transmissions

| | | |
|---|---|---|
| ACT | RX | 123.450 |
| SBY | | 118.275 |
| PTT SLCT | | mic 2 only |

A short press of **SET** switches to the next configuration item.

## 3.4 DUOWATCH – Dual-Watch Volume Reduction

By shortly pressing the **SET** button four times, with help from the **VOL/SEL** rotary knob the lowering of the volume level (“mute”) for receptions on the standby frequency (when having dual watch active) can be controlled. This allows acoustic distinction between both frequencies.

For further information about the dual watch mode see 2.9.

| | | |
|---|---|---|
| ACT | RX | 123.450 |
| SBY | | 118.275 |
| DUOWATCH | | mute: -1 |

↳range - 9 - 0

Minus 9 is the strongest reduction, i.e. the dual watch reception is much quieter.

0 means no reduction, i.e. the dual watch reception is as loud as the reception on the active frequency.

## 3.5 EXTAUDIO – Behaviour of External Audio Input

The external audio input can be used to feed a monaural audio signal to the amplifier for the headsets/speaker.

With the **VOL/SEL** rotary knob the following options can be selected:

**ever on**: The external audio input is always on, even during radio receptions and transmit mode. Use this setting only for very high priority acoustic warnings.

| | | |
|---|---|---|
| ACT | | 123.450 |
| SBY | | 118.275 |
| EXTAUDIO | | ever on |

**auto off:** The external audio input is automatically deactivated during transmit mode, or when no external audio activity is sensed.

| | |
|---|---|
| ACT | 123.450 |
| SBY | 118.275 |
| EXTAUDIO | auto off |

**not RXTX**: The external audio input is automatically deactivated during radio receptions or transmit mode. This setting does not use the external audio activity sensing, and therefore can introduce noise when no signal source is connected.

| | |
|---|---|
| ACT | 123.450 |
| SBY | 118.275 |
| EXTAUDIO | not RxTx |

| | |
|---|---|
| | Use this setting only when auto off does not react fast enough for very short external audio signals! |

A short press of **SET** switches to the next configuration item.

## 3.6 MIC TYPE – Selection Microphone Type

The next option in the configuration menu is the setting of the microphone type.

Selecting the microphone type switches the individual microphone inputs. With the setting "dynamic" the dynamic inputs MIC 1 dyn and MIC 2 dyn become active and the input for standard microphones is switched off. With the setting "standard" the inputs for standard microphones MIC 1 std and MIC 2 std become active and the dynamic microphone inputs are deactivated. This avoids noise on unused inputs.

With setting "auto", a standard microphone works on the standard input or a dynamic microphone on the dynamic input.

If the dynamic microphone inputs are occupied, these are automatically activated and the standard inputs are switched off. If the dynamic

microphones are deactivated via a switch, the standard microphone inputs are automatically activated.

| | | |
|---|---|---|
| ACT | RX | 123.450 |
| SBY | | 118.275 |
| MIC1 TYPE | | auto |

↳Range: auto, standard, dynamic

| | | |
|---|---|---|
| ACT | RX | 123.450 |
| SBY | | 118.275 |
| MIC2 TYPE | | standard |

↳Range: auto, standard, dynamic

## 3.7 MIC 1 / 2 – Microphone Input Sensitivity

The last item in the configuration menu is the setting for the microphone sensitivity.

The sensitivity can be adjusted with the **VOL/SEL** turn knob. The sensitivity can be adjusted separately for the first and second microphone and for each type.

| | | |
|---|---|---|
| ACT | | 123.450 |
| SBY | | 118.275 |
| MIC1 std | | sens: 6 |

↳Range 0 – 9

| | | |
|---|---|---|
| ACT | | 123.450 |
| SBY | | 118.275 |
| MIC1 dyn | | sens: 6 |

↳Range 0 – 9

| | | |
|---|---|---|
| ACT | RX | 123.450 |
| SBY | | 118.275 |
| MIC2 std | | sens: 4 |

↳Range 0 – 9

| | | |
|---|---|---|
| ACT | RX | 123.450 |
| SBY | | 118.275 |
| MIC2 dyn | | sens: 4 |

↳Range 0 – 9

## 3.8 SPK MODE – Speaker Deactivation

The menu item SPK MODE determines whether the speaker is deactivated permanently. This should only be selected when the radio is solely used with a connected headphone.

| | | |
|---|---|---|
| ACT | RX | 123.450 |
| SBY | | 118.275 |
| SPK MODE | | on |

The setting "on" causes the speaker to stay always activated.

| | | |
|---|---|---|
| ACT | RX | 123.450 |
| SBY | | 118.275 |
| SPK MODE | | off |

With setting “off” the speaker will be deactivated.

## 3.9 AUTO ON – Power-Up Behaviour

Under the menu item AUTO ON the switch-on behaviour can be adjusted with the supply voltage.

When "on" is set, the radio will start as soon as the operating voltage is supplied to the unit.

| | | | |
|---|---|---|---|
| ACT | | 123.450 | |
| SBY | | 118.275 | |
| AUTO ON | | on | |

If "off" is set, the device remains switched off when the voltage is applied, no matter how switched off.

| | | | |
|---|---|---|---|
| ACT | | 123.450 | |
| SBY | | 118.275 | |
| AUTO ON | | off | |

## 3.10 FW /SW – Firmware / Software Version

The firmware or the software version of the device is displayed here.
No settings are possible.

Display Firmware NF (example)

| | | | |
|---|---|---|---|
| ACT | | 123.450 | |
| SBY | | 118.275 | |
| FW | 02.00 35493 | | |

Display Software Control Head (example)

| | | | |
|---|---|---|---|
| ACT | | 123.450 | |
| SBY | | 118.275 | |
| SW | 02.00 35501 | | |

## 3.11 Master Reset – Reset to Factory Settings

With following procedure all configurations are reset to the factory settings. Switch of the device. Press MEM button and DW button and switch the unit on. Following screen appears after start-up:

| | |
|---|---|
| Reset to defaults: | |
| | |
| | yes/NO |

The master reset is activated by pushing the **SET** button. the The reset carried out by confirmation with the SET key and the radio restarts automatically.

| | |
|---|---|
| Reset to defaults: | |
| | |
| | yes/NO |

## 3.12 Overview Configuration Menu (Setup)

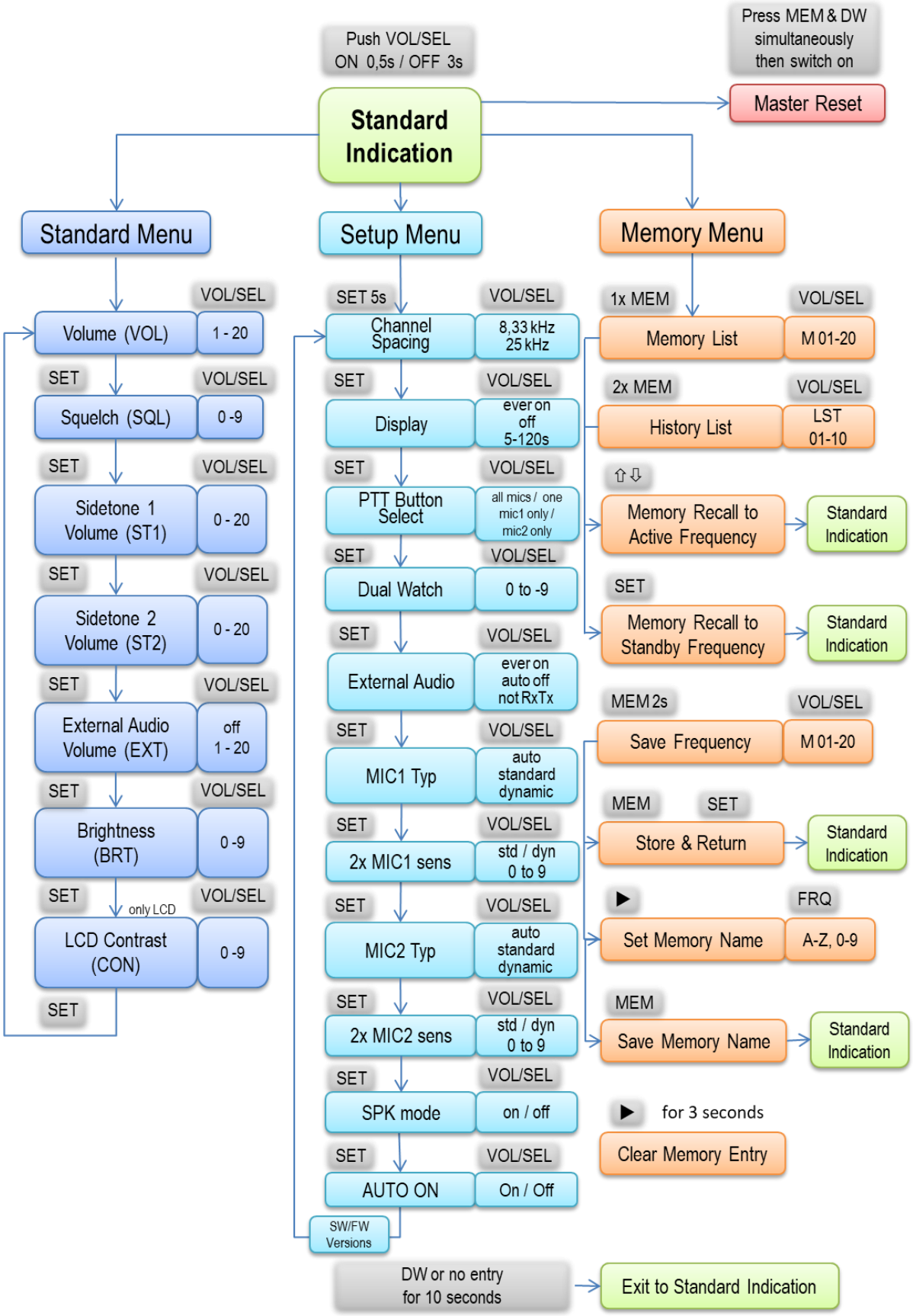

# 4 INSTALLATION

## 4.1 Advice and Tips

The following suggestions should be considered before installing

## 4.2 Telecommunication Data

| | |
|---|---|
| Manufacturer: | f.u.n.k.e. AVIONICS GmbH |
| Type Designation: | FSG80 |
| BAF Certification Number: | pending |
| Transmitter Power Output: | 6 Watt |
| Frequency: | 118,000 – 136,975 MHz |
| Emission Designator: | 6k00A3E for 25khz channel spacing<br>5k00A3E for 8,33kHz channel spacing |

## 4.3 Scope of Delivery

| Part No. | Description |
|---|---|
| FSG80 | FSG80 – VHF communication transceiver |
| ZUB4 | 2 mounting screws and 2 hollow screws – for panels up to 3 mm. |
| SSATR2 | Connector<br>(Only if no cable set was ordered) |
| 01.145.010.71e | User Manual „Operation and Installation“ |

## 4.4 Unpacking and Inspecting the Equipment

Carefully unpack the equipment. Damages due to transportation must be reported to the shipping company immediately. Save the shipping container and all packing materials to substantiate your claim.

| | |
|---|---|
| | Please use the original packing material for storage and shipping. |

## 4.5 Mounting

- Suitable sets of cables are available from f.u.n.k.e. AVIONICS GmbH.
- Select a position away from heat sources. Care for adequate convection cooling.
- Leave sufficient space for the installation of cables and connectors.
- Avoid sharp bends.
- Leave sufficient lead length for inspection or repair of the wiring of the connector.
- Bend the harness at the rear connectors to inhibit water droplets (formed due to condensation) from collecting in the connector.
- Remove rotary knobs (2 pieces) before mounting:
  - Lift-off faceplate with an appropriate tool
  - Loosen screw and remove rotary knob
  - Insert cap correctly orientated!
- The equipment is fixed front-laterally with two 6mm hollow screws and two 4x8mm screws in a 2¼ ” cut-out.
- For mounting details/drawing refer to chapter 4.10.2

## 4.6 Equipment Connections

One 25 pin D-SUB miniature connector includes all electrical connections, except for the antenna.

| | |
|---|---|
|  | The (+UB)-wire (PWR – Pin 11/12) has to be protected by a circuit breaker (4 Amp. slow-blow)! |

### 4.6.1 Microphone Connection

The standard microphone inputs provide phantom power of 9V. The sensitivity can be set in the configuration menu (see chapter 3.7).

Standard microphones (headset) and dynamic microphones (hand / gooseneck) can be connected at the same time. With setting MIC type auto, the dynamic microphone connection has priority over the standard microphone.

### 4.6.2 Headset-Connection

Two headsets may be connected in parallel per input. In this case the total impedance shall not be less than 100 Ω.

### 4.6.3 Audio-Input

The external audio input can be used for the input of warn tones or music etc. In order to avoid disturbances while this input is not used, the respective wire needs to be short-circuited.

With cable sets available from f.u.n.k.e. Avionics the external audio-input is already short-circuited by a blind plug. This blind plug can be easily removed in order to use the external audio input.

| | |
|---|---|
|  | If the external input is not used, it needs to be short-circuited with GND, in order to avoid the pickup of electrical noise. |

## 4.7 Wiring

### 4.7.1 Conductor Cross Section

| | |
|---|---|
| Power Supply (Power, GND): | AWG18 (0.96 mm²) |
| Signals: | AWG22 (0.38 mm²) |

### 4.7.2 Connector – Pin Allocation

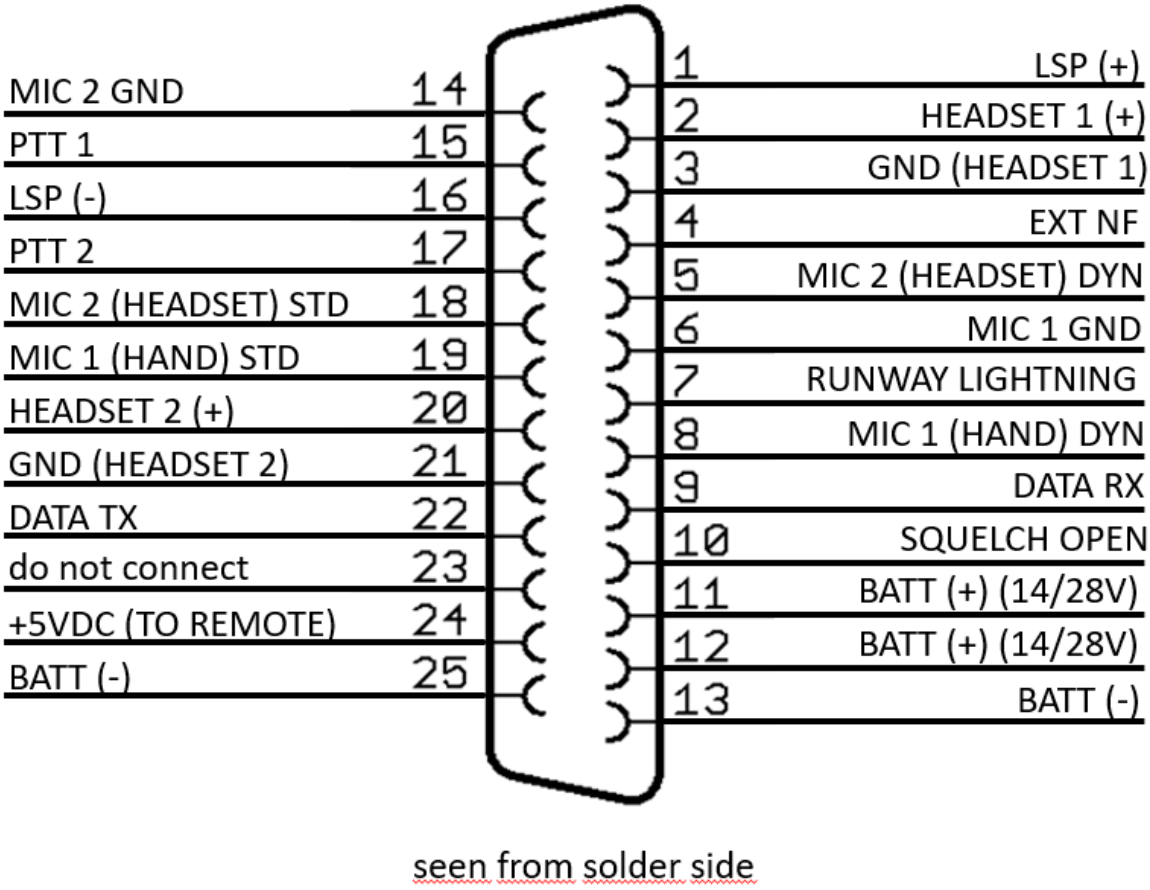


D-SUB Connector 25 Pin Female
seen from solder side

| Pin | Names | Functionality |
|---|---|---|
| 1 | LSP(+) | Output external Loudspeaker Positive |
| 2 | HEADSET-1 (+) | Output 1 Headset-Speaker Positive |
| 3 | GND (HEADSET-1) | Output 1 Headset-Speaker Negative |
| 4 | EXT-NF | Input external Audio-Signal |
| 5 | MIC 2 DYN | Input Microphone 2 Dynamic |
| 6 | MIC 1 GND | Input Microphone 1 Ground |
| 7 | RUNWAY LIGHNING | Signal for activation of a runway lightning |
| 8 | MIC 1 DYN | Input Microphone 1 Dynamic |
| 9 | DATA-RX | RS232 Receive (for Remote Control) |
| 10 | SQUELCH OPEN | Signal reception (opening of squelch) |
| 11 | +14 / +28V-PWR | Input Power Supply +12V / +28 V |
| 12 | +14 / +28V-PWR | Input Power Supply +12V / +28 V |
| 13 | BATT (-) | Ground Side of Power Supply |
| 14 | MIC 2 GND | Input Microphone 2 Ground |
| 15 | PTT-1 | Push-to-Talk 1 (connect to ground for transmitting) |
| 16 | LSP(−) | Output external Loudspeaker Negative (Not identical to ground!) |
| 17 | PTT-2 | Push-to-Talk 2 (connect to ground for transmitting) |
| 18 | MIC 2 STD | Input Microphone 2 (e.g. Headset 2) |
| 19 | MIC 1 STD | Input Microphone 1 |
| 20 | HEADSET 2 (+) | Output 2 Headset-Speaker Positive |
| 21 | GND (HEADSET 2) | Output 2 Headset-Speaker Negative |
| 22 | DATA-TX | RS232 TX (for Remote Control) |
| 23 | N/A | do not connect |
| 24 | +5VDC OUT | 5VDC Power Supply for Remote Control |
| 25 | BATT (-) | Ground Side of Power Supply |

## 4.8 Antenna

### 4.8.1 Antenna Selection

- A VHF-COM-Antenna with an impedance of 50 Ohm is required.
- Choose an antenna type feasible for the mounting location.
- The antenna should be located far away from other VHF antennas.
- Specified features depend on proper installation of the antenna.

## 4.9 Microphone / Intercom settings

The settings of MIC values are essential for communication.

Transmission merely operates when PTT is pressed.

The suppression of background noise is only possible using differential microphones, as they are usual with modern headsets. Normal electret microphones are not suitable.

## 4.10 Drawings

### 4.10.1 Dimensions

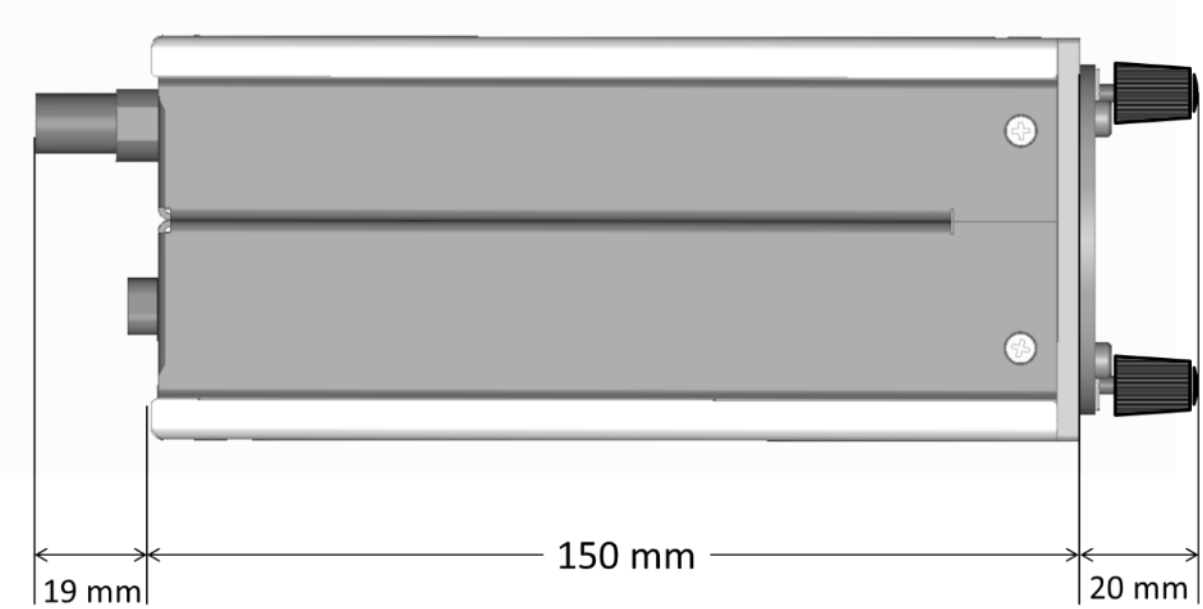


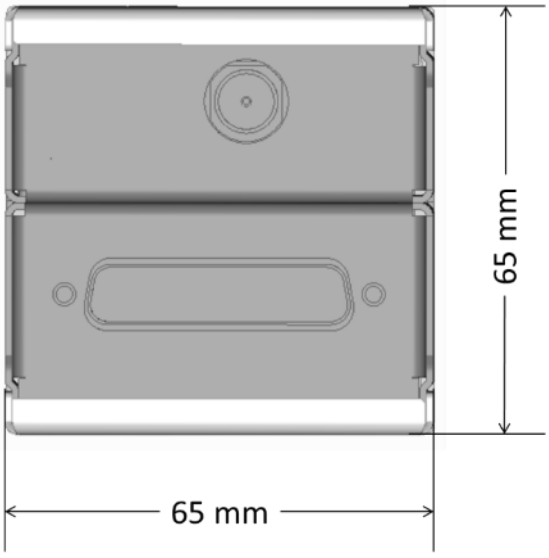

### 4.10.2 Mounting Advices

For mounting in panel with a thickness of 3-5 mm longer screws are available (Order-No. ZUB5).

**Dimensions in connector area**

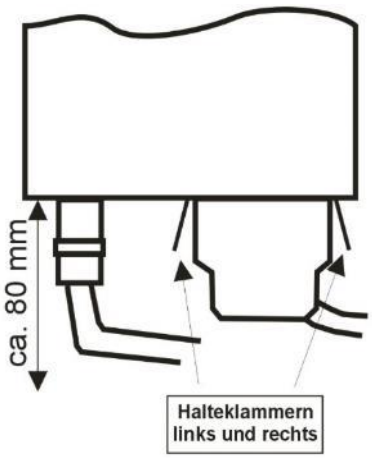


**Dimensions of panel cut-out**

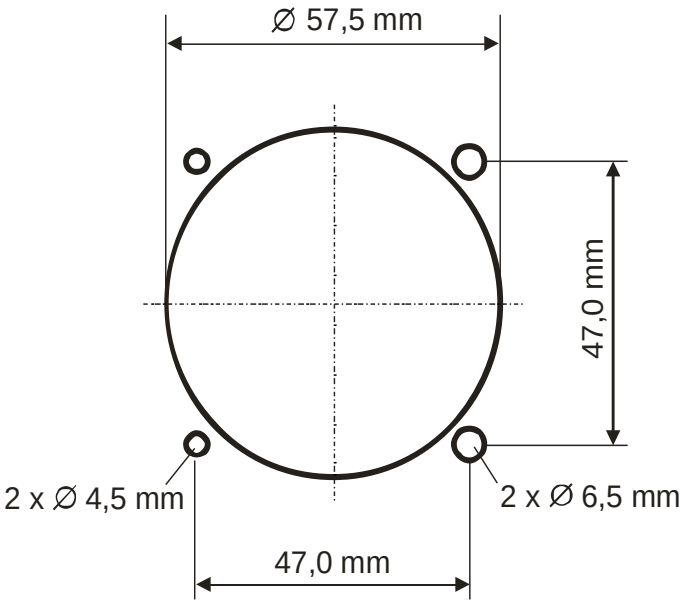


| | |
|---|---|
| | No screws may be turned in more than max. 15mm into the device – even if no hard limit is noticeable! |

| | |
|---|---|
| | The D-Sub-Connector (plug) has to be clamped with both spring locks. It is recommended to additionally secure them with a cable tie. |

# 5 APPENDICES

## 5.1 Frequency/Channel-Plan

In the following table examples for operating and displayed frequencies in the range between 118.000 ... 118.100 MHz are given. This table can be continued to 136.975 MHz following the same scheme.

| Operating Frequency (MHz) | Channel Width (kHz) | Displayed Frequency in 8.33/25 kHz Mode | Displayed Frequency in 25 kHz Mode |
|---|---|---|---|
| 118.0000 | 25 | 118.000 | 118.000 |
| 118.0000 | 8.33 | | 118.005 |
| 118.0083 | 8.33 | | 118.010 |
| 118.0166 | 8.33 | | 118.015 |
| 118.0250 | 25 | 118.025 | 118.025 |
| 118.0250 | 8.33 | | 118.030 |
| 118.0333 | 8.33 | | 118.035 |
| 118.0416 | 8.33 | | 118.040 |
| 118.0500 | 25 | 118.050 | 118.050 |
| 118.0500 | 8.33 | | 118.055 |
| 118.0583 | 8.33 | | 118.060 |
| 118.0666 | 8.33 | | 118.065 |
| 118.0750 | 25 | 118.075 | 118.075 |
| 118.0750 | 8.33 | | 118.080 |
| 118.0833 | 8.33 | | 118.085 |
| 118.0916 | 8.33 | | 118.090 |
| 118.1000 | 25 | 118.100 | 118.100 |
| 118.1000 | 8.33 | | 118.105 |
| etc. | etc. | | etc. |

## 5.2 Technical Summary

### 5.2.1 General

| | |
|---|---|
| Type:<br>Frequency Range:<br><br>Number of Channels:<br><br>Number of Channel Memories:<br><br>Nominal Supply Voltage:<br>Supply Voltage Range:<br>Current Rx at 13.8V<br>Backlight off (BRT = 0, Vol = 1)<br>Current Tx (carrier / 70% AM voice)<br>Nominal TX carrier output:<br>Modulation characteristics | FSG80, P/N FSG80-(xxx)-(xxx)<br>25 kHz spacing: 118.000 MHz to 136.975 MHz<br>8.33/25 kHz spacing: 118.000 MHz to 136.975 MHz<br>25 kHz spacing: 760 channels<br>8.33/25 kHz spacing: 2.278 channels<br>20 for channel names with 8.33/25 kHz spacing<br>10 last used frequencies with 8.33/25 kHz spacing<br>13,8 Vdc<br>11.0 – 30.0 Vdc<br>≤ 250 mA (3,5 W) standard settings after reset<br>~ 10 mA less<br>≤ 2.5 A (into 2 Ohm speaker) (35W)<br>≥ 6 Watt (37,78 dBm)<br>8.33 kHz: 5K00A3EJN<br>25 kHz: 6K80A3EJN |
| Microphone Input | Standard: 50mV – 2V at 100 Ω, sensitivity adjustable<br>Dynamic: $5mV_{pp}$ – $10mV_{pp}$ at 330 Ω, sensitivity adj. |
| External NF (Audio) In | 1V / 600 Ω |
| Sidetone Output | >0,5 W at 300 Ω |

### 5.2.2 Dimensions, Weight, Fuses

| | |
|---|---|
| Front Panel | 57 mm dia / 2¼ in. dia, fits standard panel opening |
| Depth behind panel | 200 mm / 7.85 in.<br>(allow 30 mm / 1.2 in. for plugs and harness) |
| Overall Dimensions | Width = 65 mm/2.56 in., Height = 65 mm/2.56 in.,<br>Depth = 169 mm/6.42 in. |
| Weight | 0.47 kg / 1.04 lbs without harness and connectors |
| External Fuse | Cartridge fuse 3.15 Amp, quick acting |

### 5.2.3 Approvals

| | |
|---|---|
| **Approval ATM applications**<br>Approved by Federal Supervisory Authority for Air Navigation Services (BAF) | VHF ground-based transceiver for aviation use<br>BAF Approval No. D-00xx/2023 *(approval pending)* |
| **ETSI Approvals**<br>European Telecommunications Standards Institute | "EU Type-Examination Certificate" No. **CE 0682** |
| Safety requirements | EN 62368-1: 2014/AC: 2015/A11: 2017/AC:2017<br>CTC advanced GmbH Doc. No.: 1-4786/22-01-03 |
| Health requirements | EN IEC 62311:2020 |

| | |
|---|---|
| | No.: 1-4786/01-22-05 MPE (EC)<br>issued by CTC advanced GmbH |
| EMC requirements | EN 301 489-1 V2.2.3<br>EN 301 489-22 V2.1.1<br>CTC advanced GmbH Doc. No.: 1-4786/22-01-03 |
| Radio spectrum | EN 300-676-1 V1.5.2<br>EN 300-676-2 V2.1.1<br>(8.33 kHz CH spacing, ground operation)<br>CTC advanced GmbH Doc. No.: 1-4786/22-01-02 |
| Software | EUROCAE ED-12C / RTCA DO-178C, Level D |

## 5.2.4 Receiver Characteristics (EN300 676)

| | | | |
|---|---|---|---|
| Receiver Type | Dual Superhet | | |
| IF Frequencies | First IF 45 MHz, second IF 450 kHz, high injection | | |
| Squelch Type | Manually adjustable (0 – 9) | | |
| Sensitivity | 8.33 kHz: ≥ 105.3 / ≥ -104.6 dBm (normal / extr. cond)<br>25 kHz : ≥ 103.8 / ≥ -103.1 dBm (normal / extr. cond.) | | |
| Harmonic distortion | ≤ 0.7% (m=30%) ≤ 2.9% (m=90%) | | |
| Audio frequency response | 8,33 kHz: 350 Hz to 2,5 kHz: < +0.0 dB and -1.66 dB<br>25 kHz: f 300 Hz to 3,4 kHz ≤ +0.17 dB and -2.86 dB | | |
| Audio noise | 8.33 kHz, 127.5 MHz: (S+N)/N = 50.8 dB<br>25 kHz, 127.5 MHz: (S+N)/N = 49.9 dB | | |
| Effective acceptance bandwidth | 8,33 kHz:-2.8 kHz: 17.3 dB / +2.8 kHz: 15.7 dB<br>25 kHz: -8.5 kHz: 14.5 dB / +8.5 kHz: 14.4 dB | | |
| Adjacent channel rejection | 8,33 kHz ch spacing: below > 64.1 dB / high > 62.6dB<br>25 kHz ch spacing: below > 66.1dB / high > 66.5dB | | |
| Spurious response rejection | 118.8998 MHz 81.9 dB<br>128,3964 MHz: 78.1 dB<br>137.8711 MHz: 78.4 dB | | |
| Intermodulation response rejection | 8,33 kHz ch spacing: below > 73.4 dB / high > 73.4dB<br>25 kHz ch spacing: below > 72.8 dB / high > 71.8dB | | |
| Blocking or desensitization | 8.33kHz: 127.5MHz -1 MHz: 94.6dB / +1MHz: 92.9dB<br>25 kHz: 127.5MHz -1 MHz: 94.6dB / +1MHz: 93.0dB | | |
| Conducted spurious emissions | **Freq. range** | **Rx 8.33 kHz** | **Rx 25 kHz** |
| | 9 – 150 kHz<br>B= 1 kHz | -73.5 dBm<br>(44.7 pW) | -72.3 dBm<br>(58.9 pW) |
| | 150 kHz – 30 MHz<br>B= 10 kHz | -77.4 dBm<br>(18.2 pW) | -76.8 dBm<br>(20.9 nW) |
| | 30 MHz – 1 GHz,<br>B= 100 kHz | -79.2 dBm<br>(12.0 pW) | -78.9 dBm<br>(12.9 pW) |
| | >1 GHz – 4 GHz,<br>B= 1 MHz | -72.3 dBm<br>(1.8 nW) | -72.8 dBm<br>(52.5 nW) |
| Squelch operation | Squelch mute attenuation ≥ 80.5 dB<br>Squelch hysteresis: 4.00 dB | | |

| | |
|---|---|
| Cross modulation rejection | 8.33kHz: 127.5MHz -1 MHz: 82.1 dB / +1MHz: 80.0 dB<br>25 kHz: 127.5MHz -1 MHz: 81.0 dB / +1MHz: 80.0dB |
| Receiver dynamic range | RX freq. (MHz) / ch spacing — AF@ -101dBm — AF@ -1dBm — AF change<br>127.5 MHz 8.33kHz — 325.0 mV — 316.7 mV — -0.22 dB<br>127.5 MHz 25kHz — 312.0 mV — 338.9 mV — 0.72 dB |
| AF Automatic Gain Control (AGC) | 8.33 kHz, 127.5 MHz: m= 30% / 60% / 90% :<br>AF change: 0.05 dB / 0.00 dB / -0.05 dB<br>25 kHz, 127.5 MHz: m= 30% / 60% / 90% :<br>AF change: 0.09 dB / 0.00 dB / -0.15 dB |
| Cabinet Radiation EN 300 113-1<br>Tx: 118.000/127.500/136.975 MHz | 30 MHz – 1 GHz: ≤ -58 dB / -57 dB / -61 dB<br>1 GHz – 4 GHz: ≤ -59 dB / -56 dB / -57 dB |

(values from test report)

## 5.2.5 Transmitter Characteristics (EN300 676)

| | |
|---|---|
| TX RF Output Power at 13.8 Vdc | ≥ 6 Watt / 50 Ω (carrier), ≥ 20 Watt PEP |
| Modulation | Amplitude modulation, AM (A3E) |
| TX duty cycle | Continuous transmission proof<br>Automatic TX termination after 35 seconds |
| Transmitter frequency error | ≤ 0.6 ppm (-20°C - +50°C) |
| Carrier power variation | Variation: ≤ +1.3 / -0.7 dB<br>(rated TX power 6W / -20° - +55°C) |
| Modulation depth (speech) | m ≥ 85,6% (15°- 35°C) m ≥ 84.7% (-20° - +55°C) |
| Modulation compression (speech) | 127.5 MHz — m 10% — m 30% — m 85% — Max. m (%) @ 0 dBV<br>T/V nom [dBV] — -38.88 — -29.27 — -20.18 — 83.6<br>AF incr. dB — +10.0 ±2 — +9.0 +1/-2 — ≤ 95%<br>Measurement — +9.61dBV — +9,79dBV |
| Amplitude modulation distortion | 118.000 MHz m = 0,87%<br>127.500 MHz m = 1,23%<br>136.975 MHz m = 0,80% |
| Audio frequency response | 8,33 kHz: 350 Hz to 2,5 kHz: < +0.2 dB and -0.47 dB<br>At 3,2 kHz modulation depth ≥ -50 dB<br>25 kHz: f 300 Hz to 3,4 kHz ≤ +0.1 dB and -3.28 dB<br>At 5 kHz modulation depth ≥ -49 dB |
| Adjacent channel power | 8,33 kHz: low <-56 dB / high <-58 dB<br>25 kHz: low <-70 dB / high <-70 dB |
| Broadband noise measurement | ≤ 130 dBc/Hz. |
| Conducted spurious emissions | **Freq. range** — **Tx 8.33kHz** — **Tx 25kHz**<br>9 – 150 kHz B= 1kHz — ≤ -57.2 dBm (1.9 nW) — ≤ -57.7 dBm (1.7 nW)<br>150 kHz -10 MHz B= 9 -10 kHz — ≤ -49.7 dBm (10.7 nW) — ≤ -48.9 dBm (12.9 nW)<br>>10 – 30 MHz B= 9 - 10 kHz — ≤ -53.2 dBm (4.8 nW) — ≤ -53.2 dBm (4.8 nW) |

| | | | |
|---|---|---|---|
| | >30 MHz – 1 GHz<br>B= 10 kHz | ≤ 42.5 dBm<br>(56.2 nW) | ≤ 42.2 dBm<br>(60.3 nW) |
| | >1 GHz – 4 GHz<br>B= 10 kHz | ≤ -57,1 dBm<br>(1.9 nW) | ≤ -57.1 dBm<br>(1.9 nW) |
| Intermodulation attenuation | Protection ratio ≥ 40 dB | | |
| RF power attack time / release time | $t_a$ < 1.70 ms / $t_r$ < 3.89 ms | | |
| Keying Transient frequency behaviour | >30 dB below ref level | | |
| Sidetone | Amplitude modulation distortion ≤ 10 %. | | |
| Cabinet Radiation EN 300 113-1<br>Tx: 118.000 / 127.500 / 136.975 MHz | 30 MHz – 1 GHz: ≤ -42 dB / -46 dB / -47 dB<br>1 GHz – 4 GHz: ≤ -45 dB / -52 dB / -46 dB | | |

(values from test report)

# 6 EG KONFORMITÄTSERKLÄRUNG

**EG-Konformitätserklärung zur Richtlinie 2014/53/EU**
**EG-Gebrauchstauglichkeitserklärung für Interoperabilitätskomponenten gemäß (EU) 2018/1139**

*EC-Declaration of Conformity to Directive 2014/53/EC*
*EC-Declaration of Suitability for use of interoperability constituents according to (EU) 2018/1139*

*CE-Déclaration de conformité à la directive 2014/53/CE*
*CE-Déclaration d'aptitude à l'emploi de constituants d'interopérabilité suivant (UE) 2018/1139*

| | |
|---|---|
| Hersteller:<br>*Manufacturer/fabricant:* | **f.u.n.k.e. AVIONICS GmbH** |
| Anschrift:<br>*Adress/adresse:* | **Heinz-Strachowitz-Str. 4, D-86807 Buchloe, Germany** |
| Produktbezeichnung:<br>*Product name:*<br>*Nom du produit:* | **VHF Bodenfunkstelle, mobil**<br>*Ground-based VHF transceiver, mobile*<br>*Émetteur-récepteur VHF au sol, mobile* |
| Typen:<br>*Types/types:* | **FSG80** |
| Produktbeschreibung:<br>*Product description:*<br>*Description du produit:*<br> 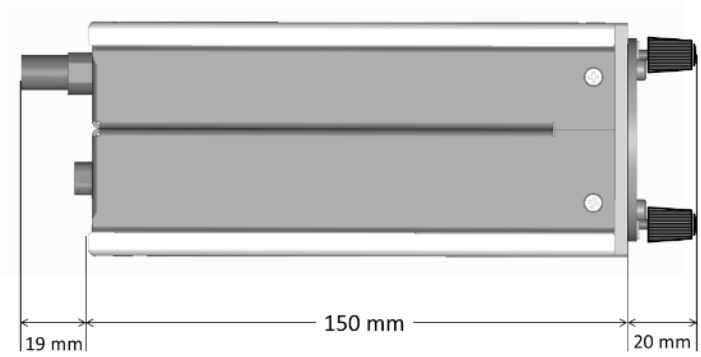 <br><br> 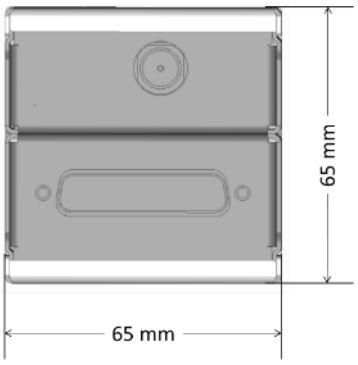 <br> | VHF Funkgerät bestehend aus Hardware und Software (Firmware) zur Verwendung als mobile Bodenfunkstelle für den mobilen Flugfunk<br><br>*VHF transceiver comprising hardware and software (firmware) to be used as a mobile ground radio station*<br><br>*Emetteur-récepteur portative VHF, comprenant le matériel et le logiciel (microprogramme) d'être utilisé comme une station de radio mobile*<br><br><u>Technische Daten:</u><br>• Gewicht: ca. 470 g<br>• 25 KHz und 8.33 KHz Raster<br>• Ausgangsleistung : typ. 6 Watt / 20 Watt PEP<br>• Arbeits-Temperaturbereich: -20 bis +55 °C<br>• Abmessungen: 65 x 65 x 169 mm<br>• Frequenzbereich: 118,000 bis 136,975 MHz<br><br><u>*Technical Data:*</u><br>• *Weight: approx. 470 g*<br>• *25 KHz and 8.33 KHz channel spacing*<br>• *Output power : typ. 6 watts / 20 watts PEP*<br>• *Operating temperature: -20 to +55 °C*<br>• *Dimensions: 65 x 65 x 169 mm*<br>• *Frequency range: 118.000 to 136.975 MHz*<br><br><u>*Données techniques:*</u><br>• *Poids: env. 470 g*<br>• *espacement de 25 KHz et 8,33 KHz*<br>• *Puissance de sortie: typ. 6 watts / 20 watts PEP*<br>• *Température de fonctionnement: -20 à +55 ° C*<br>• *Dimensions: 65 x 65 x 169 mm)*<br>• *Gamme de fréquences: 118,000 à 136,975 MHz* |

| | |
|---|---|
| Wir erklären in alleiniger Verantwortung, dass die oben bezeichnete Produkte mit folgenden Europäischen Richtlinien und Verordnungen übereinstimmen:<br><br>*We declare under our sole responsibility that above products are in conformity with the following directives and regulations:*<br><br>*Déclarons sous notre seule responsibilité, que les produits repondent aux directives et règlements suivantes:* | **2014/53/EG** **Funkanlagen-Richtlinie**<br>*2014/53/EC* *Radio Equipment Directive*<br>*2014/53/CE* *Directive RED*<br>**(EU) 2018/1139** **Verordnung Zivilluftfahrt**<br>*(EU) 2018/1139* *Regulation Civil Aviation*<br>*(UE) 2018/1139* *Règlement de l'aviation civile*<br>**(EU) 1079/2012** **Durchführungsverordnung Sprachkanalabstand**<br>*(EC) 1079/2012* *Implementing Regulation Voice Channel Spacing*<br>*(CE) 1079/2012* *Règlement d'exécution espacement des canaux de communication vocale* |
| Angewandte harmonisierte Normen und technischen Spezifikationen:<br>*Applied harmonised standards and technical specifications:*<br>*Normes harmonisées et spécifications techniques:* | **EN 50665:2017**<br>**ETSI EN 301 489-1 V2.2.3**<br>**ETSI EN 301 489-22 V2.1.1**<br>**ETSI EN 300 676-1 V1.5.2**<br>**ETSI EN 300 676-2 V2.1.1**<br>**DIN EN 62311**<br>**DIN EN 62368-1: 2014/AC: 2015/A11: 2017**<br>**SSB FL 021 - Bundesnetzagentur:**<br>Schnittstellenbeschreibung für Bodenfunkstellen des mobilen Flugfunkdienstes (AM Sprechfunkanlagen) im Frequenzbereich 117,975-137 MHz |
| Verfahren zur Bewertung der Konformität:<br>*Conformity assessment procedures:*<br>*Procédures d'évaluation de la conformité:* | **2014/53/EG: Verfahren gemäß Anhang III;**<br>**(EU) 2018/1139: Module B + C (EG-Baumusterprüfung + Konformität mit Bauart) nach 768/2008/EG**<br><br>*2014/53/EC: procedure laid down in Annex III*<br>*(EU) 2018/1139: Module B + C (EC-type examination + conformity to type) according to 768/2008/EC*<br><br>*2014/53/CE: procédure prévue à l'annexe III;*<br>*(UE) 2018/1139: Module B + C (examen CE de type + conformité au type) suivant 768/2008/CE* |
| Benannte Stelle gemäß 2014/53/EG und Nummer der EG Baumusterprüfbescheinigung:<br>*Notified Body acc. to 2014/53/EC and number of the EC type examination certificate:*<br>*Organisme agreé á 2014/53/CE et número dú certificate des test CE:* | **CTC advanced GmbH, No. 0682**<br><br>**Certificate Registration No.: EU23-0128-01-TEC** |
| Ort, Datum der Ausstellung<br>*(Place, date of issue)/ (Lieu, date de lédition)* | **Buchloe, 22.01.2024** |
| Revision: | **1.0** |

Der Hersteller erklärt hiermit, dass die oben beschriebene Komponente bezüglich ihrer intrinsischen Konformität bewertet wurde und die angewandten gemeinschaftlichen Spezifikationen erfüllt.
*The manufacturer hereby declares that the constituent described above was assessed with regard to its intrinsic conformity and meets the applicable Community specifications.*
*Le fabricant déclare par la présente que le constituant décrit ci-dessus a été évalué en ce qui concerne sa conformité intrinsèque et répond aux spécifications communautaires applicables.*

Diese Erklärung bezieht sich auf die Betrachtung der Gebrauchstüchtigkeit innerhalb des Flugverkehrsmanagmentumfeldes zur VO (EU) 2018/1139.
*This statement refers to the consideration of the suitability for use within the air traffic management environment to regulation (EU) 2018/1139.*
*Cette déclaration se réfère à l'examen de l'aptitude à l'usage au sein de l'environnement de gestion du trafic aérien au règlement (UE) 2018/1139*

Dr. Thomas Wittig

Geschäftsführer f.u.n.k.e. AVIONICS GmbH
*Managing Director f.u.n.k.e. AVIONICS GmbH*
*Directeur f.u.n.k.e. AVIONICS GmbH*

Name und Unterschrift des Befugten
*Name and signature of authorized person*
*Nom et signature de la personne autorisée*

EU Type Examination Certificate

CTC advanced
member of RWTÜV group

Certificate Holder: f.u.n.k.e. AVIONICS GmbH
Heinz-Strachowitz-Str. 4
86807, Buchloe
Germany

Bundesnetzagentur

BNetzA-bS-02/51-52

authorized by the German Government to act as Notified Body in accordance with the RE Directive 2014/53/EU of 16 April 2014.

Product Manufacturer: see Certificate Holder

Product Designation: FSG80

Product Description: VHF ground-based transceiver for aviation use

## Conformity Assessment:

| Essential requirements | Examined documentation | Result |
|---|---|---|
| Safety<br>RED, Article 3.1a | Technical documentation including test report(s) | conform |
| Health<br>RED, Article 3.1a | Technical documentation including test report(s) | conform |
| EMC<br>RED, Article 3.1b | Technical documentation including test report(s) | conform |
| Radio spectrum<br>RED, Article 3.2 | Technical documentation including test report(s) | conform |
| Delegated Acts according to RED Article 44, Article 3.3g | Technical documentation including test report(s) | N/A |

**EU Type Examination Certificate:**
In accordance with Annex III of the European Council Directive 2014/53/EU on radio equipment, we state that the identified equipment type complies with the essential requirements stated above. The scope of this evaluation relates to the submitted documents only.

**Marking:**
The product shall be marked with the CE marking as required in the Council Directive 2014/53/EU.

**Annexes:**
The certificate is only valid in conjunction with the following number of annexes: 1

**Validity:**
The validity of this certificate is limited to 5 years after the date of issue. Revisions of the applied standards and/or modifications of the approved type that may affect the conformity of the radio equipment with the essential requirements of Directive. 2014/53/EU may also have an impact on the validity of this certificate.

Certificate Registration No.: EU23-0128-01-TEC

CE 0682

CTC advanced GmbH

cn=Ernst Hussinger, o=ctecomadvanced GmbH, ou=HUS-230606, email=ernst.hussinger@ctecomadvanced.com, c=DE
2023.09.14 14:51:24 +02'00'

GERMAN NOTIFIED BODY
EUROPEAN ID-NO. 0682

Authorized signature / title

**Product Characteristics:**

CTC advanced GmbH
Unterluerkheimer Str. 6-10 | 66117 Saarbruecken | Germany | www.ctcadvanced.com

Annex 1 to EU Type Examination Certificate – Registration No. EU23-0128-01-TEC

| | |
|---|---|
| Hardware version: | 1.0 |
| Software version: | 1.0 |
| Operating frequency range: | 118.000 MHz – 136.975 MHz simplex |
| Output power: | ≤ 40 dBm EIRP |
| Modulation / Channel spacing: | AM / 8.33 kHz and 25 kHz |
| Antenna: | external antenna / gain 2.1 dBi |
| Other characteristics: | |
| Operating temperature: | -20 – +55 °C |
| Power supply: | 11 – 30 VDC |

## Conformity Assessment:

| Essential requirements | Examined documentation |
|---|---|
| Safety | EN 62368-1: 2014/AC: 2015/A11: 2017/AC:2017<br>-No.: 1-4786/22-01-03 issued by CTC advanced GmbH |
| Health | EN IEC 62311:2020<br>-No.: 1-4786/01-22-05 MPE (EC) issued by CTC advanced GmbH |
| EMC | EN 301 489-1 V2.2.3<br>EN 301 489-22 V2.1.1<br>-No.: 1-4786/22-01-04 issued by CTC advanced GmbH |
| Radio spectrum | EN 300 676-1 V1.5.2<br>EN 300 676-2 V2.1.1<br>-No.: 1-4786/22-01-02 issued by CTC advanced GmbH |

1/1

# 7 DISPOSAL

**Umweltinformationen für Kunden innerhalb der Europäischen Union**
*Regulatory and Compliance/WEEE Legislation within the European Union*

Gemäß der Europäischen Richtlinie 2002/96/EG über Elektro- und Elektronik-Altgeräte (WEEE) und die Änderung 2008/34/EG dürfen Produkte, die direkt am Gerät und/oder an der Verpackung mit diesem Symbol versehen sind, nicht zusammen mit gewöhnlichem Abfall entsorgt werden, sondern sind über die für elektrische und elektronische Geräte zuständigen und von der Regierung oder örtlichen Behörden dazu bestimmten Sammelstellen zu entsorgen. Ordnungsgemäßes Entsorgen und Recyceln trägt dazu bei, potentielle negative Folgen für Umwelt und die menschliche Gesundheit zu vermeiden. Wenn Sie weitere Informationen zur Entsorgung Ihrer Altgeräte benötigen, wenden Sie sich bitte an die örtlichen Behörden oder städtischen Entsorgungsdienste oder an den Händler, bei dem Sie das Produkt erworben haben.

*According to the European directive 2002/96/EC on waste electrical and electronic equipment (WEEE) an the amendment 2008/34/EC: Products, that are marked with the above symbol directly at the device and/or at the packaging, may not to be disposed together with ordinary waste, but have to be disposed using the appropriate differentiated collection centres for electronic and electro waste. Appropriate differentiated waste collection and recycling helps to prevent possible negative environmental and health effects. If you need additional information about the disposal of your products after the end of their working life, please contact your local authorities or municipal waste disposal organisation, or the dealer you have purchased the product from.*

## Notes:

f.u.n.k.e.
AVIONICS GMBH

**f.u.n.k.e. AVIONICS GmbH**
Heinz-Strachowitz-Str. 4
DE-86807 Buchloe
Germany

phone.: +49-8241 80066 0
fax.: +49-8241 80066 99
E-mail:
service@funkeavionics.de
www.funkeavionics.de